CASAPPA®
FLUID POWER DESIGN

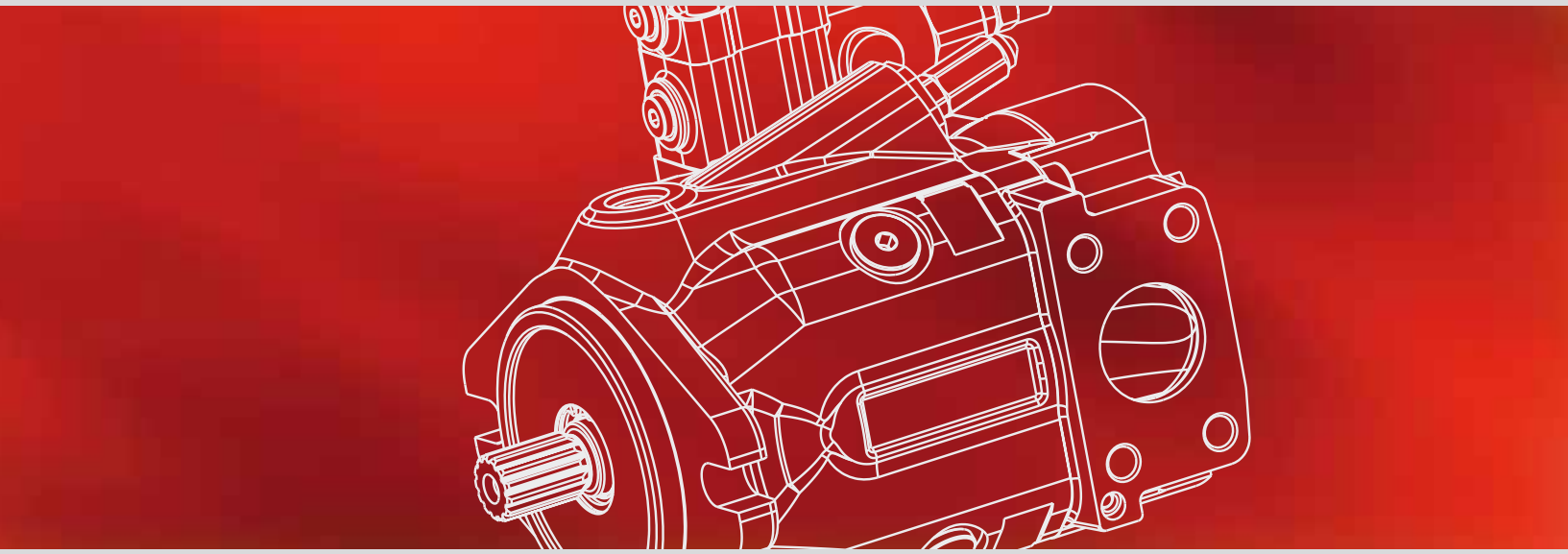

VARIABLE DISPLACEMENT AXIAL PISTON PUMPS

MVPD

INDEX

Replaces: 01/01.2013
02/05.2021

Modification from former edition.

INTRODUCTION

Replaces: 01/01.2013

More power and reduced dimensions are the main features of the new series of axial piston pumps with variable displacement swash plate “MVPD”.
The manufacturers of mobile machines must comply with the new more restrictive rules on emission standards which imposes the reduction of consumption, the increase in power and reduction of the overall dimensions of the machine. The “MVPD” pumps allow higher flow rates than traditional pumps with same dimensions, higher machine speeds without affecting the design of the hydraulic system and a high power-to-dimensions ratio.

DISPLACEMENTS
From 22,5 cm^3/rev (1.37 in^3/rev)
Up to 65 cm^3/rev (3.97 in^3/rev)

PRESSURE
Max. continuous 230 bar (3335 psi)
Max. intermittent 260 bar (3770 psi)
Max. peak 290 bar (4205 psi)

SPEED
Max. 3200 min^{-1}

APPLICATION
Medium pressure

SECTOR
Mobile

- High performances
- Higher speed
- Higher power-to-weight ratio
- Longer service life
- Low noise emission
- Cost-optimized design
- Max. and min. displacement limiter
- Drive shaft bearing suitable for radial and axial loads
- Hydraulic and Electro-hydraulic controls
- Short response times

TIPICAL APPLICATIONS
- Telehandlers
- Forklifts
- Fan Drive Systems
- Tractors
- Agricultural Applications

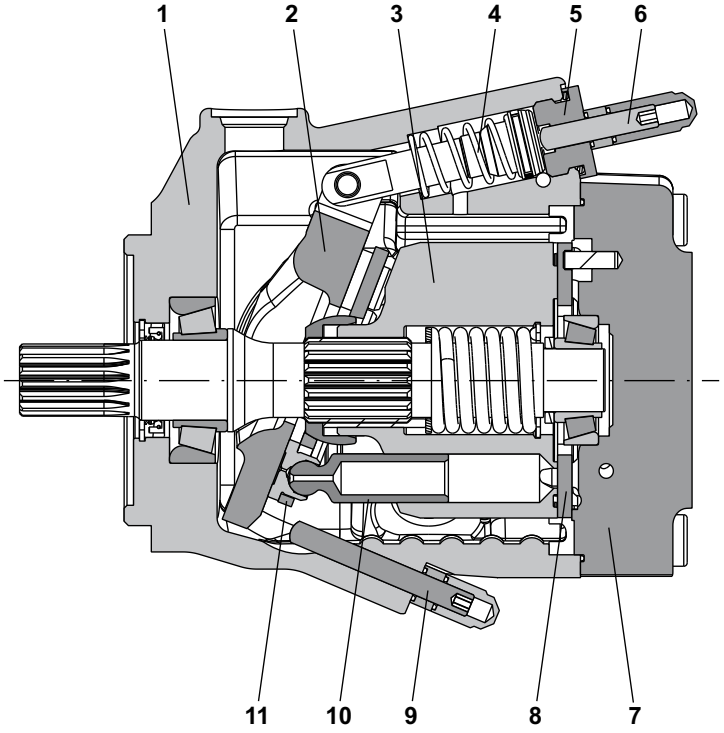

1	Pump body
2	Swash plate
3	Cylinders block
4	Counterbalancing spring
5	Plug
6	Max. displacement limiter
7	Cover
8	Valve plate
9	Min. displacement limiter
10	Piston
11	Piston guide plate

02/05.2021

GENERAL NOTES
For some configuration the double shaft seals is available.
Please contact us for more information.

GENERAL INFORMATION / INSTRUCTIONS

DIRECTION OF ROTATION
Clockwise or anti-clockwise defined looking at the drive shaft.

HYDRAULIC FLUID
Mineral oil based hydraulic fluid conforming to DIN 51524, fire resistant fluids and biodegradable fluids according to the technical data shown in the tables on pages 7 ÷ 9. The system should be designed to prevent aeration of the hydraulic fluid.

FLUID VISCOSITY
The fluid viscosity range for optimal use of MVPD pump is between 15 and 35 cSt (77 and 163 SSU).
Functional limit conditions are:
max.: 1500 cSt (6818 SSU) at start up at minimum tempera ture of -25 °C (-13 °F) with straight and short inlet line.
min.: 10 cSt (58 SSU) at maximum temperature of 110 °C (230 °F)

FILTRATION
To ensure the optimal performance and the maximum life to the pump, the hydraulic fluid must have and maintain a fluid contamination within the values shown in the table below.

Working pressure bar (psi)	Δp < 140 (2030)	140 < Δp < 210 (2030) (3045)	Δp > 210 (3045)
Contamination class NAS 1638	9	8	7
Contamination class ISO 4406:1999	20/18/15	19/17/14	18/16/13
Achieved with filter $ßx_{(c)}$ ≥75 according to ISO 16889	10 µm	10 µm	10 µm

FILL WITH OIL BEFORE START-UP

Casappa recommends to use its own production filters:

IKRON® Fluid Filtration

STORAGE
The storage must be in a dry environment.
Max storage time in ideal conditions is 24 months.
The ideal storage temperature is between 5 °C (41 °F) and 20 °C (68 °F). No problem in case of temperature between -40 °C (-40 °F) and 50 °C (122 °F).
Below -40 °C (-40 °F) please contact us.

INSTALLATION
Check that the maximum coupling eccentricity stays within 0,25 mm (0.0098 in) to reduce shaft loads due to misalignment. It is advised to use a flexible coupling suitable to absorb eventual rotational shocks. For applications with axial and radial loads exceeding published standards, consult our sales department. The direction of rotation of the pump must agree with the prime mover rotation. Before installation, the case of the pump must be filled with fluid.

LINES
The lines must have a major diameter which is at least as large as the diameter of pump ports, and must be perfectly sealed. To reduce loss of power, the lines should be as short as possible, reducing the sources of hydraulic resistance (elbow, throttling, gate valves, etc.) to a minimum. A length of flexible tubing is recommended to reduce the transmission of vibrations. Before connecting the lines, remove any plug and make sure that the lines are perfectly clean. Check that the drain line is dimensioned in a way to guarantee a case pressure lower than 1,5 bar (22 psi) absolute. The drain line must be connected directly (no filter, no valves, no oil cooler) to the tank and must terminate below the oil level. Check that the dimensions of the suction line guarantee a pressure equal or superior to 0,8 bar (12 psi). Inlet pressure less than 0,8 bar (12 psi) could cause an increase of noise emission, the decrease of the pump performances and a reduction of its life expectancy.

STARTING UP
Check that all connections are secure and that the entire system is completely clean. Add oil to the tank always using a filter. Bleed the air from the circuit to help the filling. Turn on the system for a few moments at minimum speed, then bleed the circuit again and check the level of oil in the tank. Gradually increase the pressure and speed of rotation up to the pre-set operating levels, which must stay within the stated limits as specified in the catalogue.

FOR VERY LOW TEMPERATURE

STARTING UP
We strongly recommend to warm up the oil before running the machine. If this is not possible, the warm up of the oil and of the pump should be carried out following these instructions:
- Start the pump in stand-by condition at minimum speed. Keep this working condition until the pump case reaches -20 °C (-4 °F)
- Increase slowly the displacement.Max pressure permitted: 50 bar (725 psi). The maximum permitted speed is strictly connected to the layout of the inlet circuit; check that there is no cavitation before increasing the speed.
- Keep this working condition until the oil temperature in the whole system is -10 °C (14 °F).
- Maximum pressure can be achieved from now on.
- Always check the outlet flow to prevent cavitation damage.

All the temperature are referred to oil with viscosity ISO VG 32 according to DIN 51 519.

SUGGESTIONS
To prevent cavitation at low temperature we suggest:
- To warm up the tank
- To pressurize the tank
- To oversize the inlet hose

02/05.2021

MOUNTING POSITIONS

Standard pump is supplied with D1 drain hole open and D2, D3, D4 plugged (◆ if available).
Before installation fill the pump with hydraulic oil for at least 3/4 of the volume keeping it in horizontal position.
The pump can be mounted in a horizontal or vertical position.
The highest of the case drain ports must be used to keep the required filling oil.
If D1 is not the highest drain port it must be closed by moving the plug from the hole chosen for the drain line.
The pump can be located above the oil level if the absolute pressure at the inlet port stays within the stated limits.
With exception of pump mounted below the oil level, we recommend to interpose a baffle plate between inlet and drain line.
To reduce further noise emission, we recommend to mount the pump below the oil level and avoid suction lines with sharp restrictions.

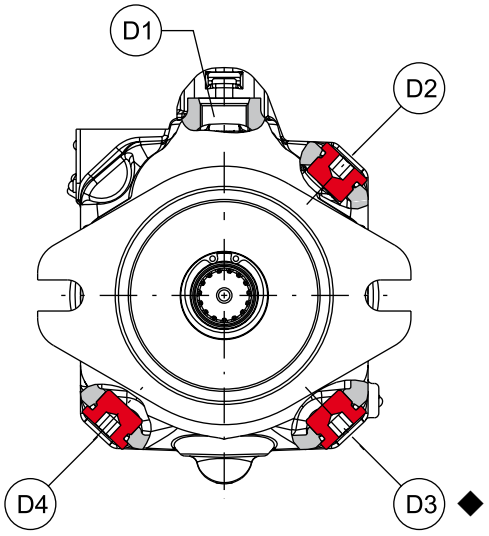

HORIZONTAL MOUNTING		VERTICAL MOUNTING	
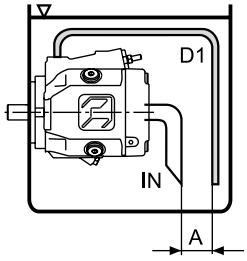	**Arrangement inside the tank.** Minimum oil level equal or above the pump mounting face. A ≥ 200 mm (7.874 in)	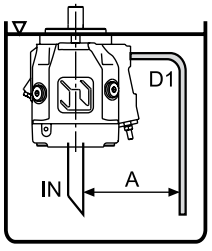	**Arrangement inside the tank.** Minimum oil level equal or above the pump mounting face. A ≥ 200 mm (7.874 in)
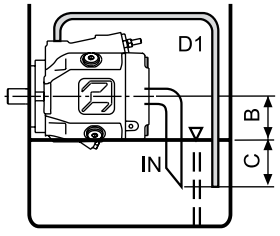	**Arrangement inside the tank.** Minimum oil level below the pump mounting face. Min. inlet pressure= 0,8 bar abs (24 in Hg) B ≤ 800 mm (31.4961 in) C = 200 mm (7.874 in)	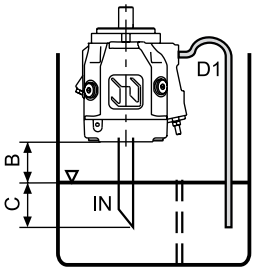	**Arrangement inside the tank.** Minimum oil level below the pump mounting face. Min. inlet pressure= 0,8 bar abs (24 in Hg) B ≤ 800 mm (31.4961 in) C = 200 mm (7.874 in)
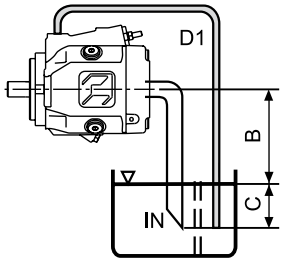	**Arrangement outside the tank above oil level.** Min. inlet pressure= 0,8 bar abs (24 in Hg) B ≤ 800 mm (31.4961 in) C = 200 mm (7.874 in)	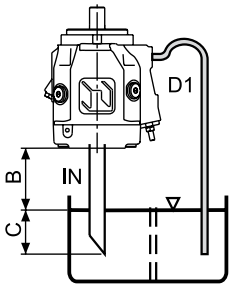	**Arrangement outside the tank above oil level.** Min. inlet pressure= 0,8 bar abs (24 in Hg) B ≤ 800 mm (31.4961 in) C = 200 mm (7.874 in)
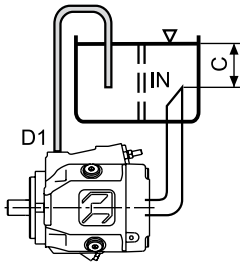	**Arrangement outside the tank below oil level.** C = 200 mm (7.874 in)		

IN= inlet line - D1= drain line - A= min. distance between the line - B+C= permissible suction height - C= line immersion depth

02/05.2021

DISPLACEMENTS AND WORKING PRESSURES RANGE

MVP-MVPD Comparison

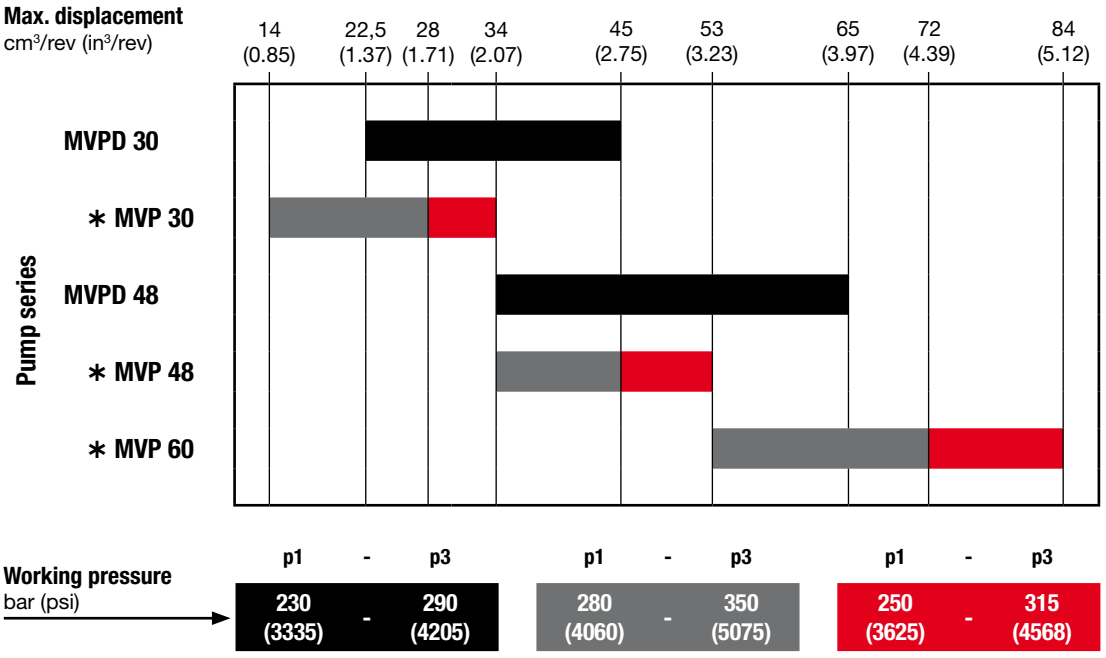

∗: MVP Series. For more information please consult the respective technical catalogue.

PRESSURE DEFINITION

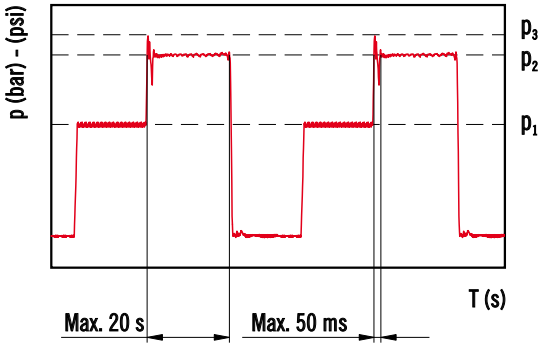

p_1 Constant operating pressure
p_2 System pressure (relief valve setting)
p_3 Peak of pressure

The peak of pressure is the max pressure allowed and it corresponds to the overshoot of the relief valve.

Please note that both relief valve setting and overshoot must be lower than their limits.
If the relief setting is compliant but the overshoot is higher than the limit, the relief setting must be decreased until the overshoot is compliant to Casappa limit.

Please contact us for high frequency applications.

02/05.2021

FEATURES

Technical data with mineral oil

HL or **HLP** mineral oil based hydraulic fluid to DIN 51524

Replaces: 01/01.2013

							o
Pump type MVPD				30·34	30·45	48·53	48·65
Max. displacement (theor.) V_{max}	cm^3/rev (in^3/rev)			34 (2.07)	45 (2.75)	53 (3.23)	65 (3.97)
Inlet pressure	bar abs. (in Hg)		min.	0.8 (24)			
	bar abs. (psi)		max.	25 (363)			
Max. outlet pressure p_{max}	bar (psi)		p_1	230 (3335)			
			p_2	260 (3770)			
			p_3	290 (4205)			
Max. drain line pressure	bar abs. (psi)			1,5 (22)			
Max. speed n_{max}	min^{-1}	o	@ V_{max} (1)	3200	2900	2800	2600
Max. delivery (theor.)	l/min (US gpm)	o	@ n_{max}	109 (28.8)	131 (34.6)	148 (39.1)	169 (44.6)
		o	@ 2000 min^{-1}	68 (18.0)	90 (23.8)	106 (28.0)	130 (34.3)
		o	@ 1500 min^{-1}	51 (13.5)	68 (18.0)	80 (21.1)	98 (25.9)
Max. power (theor.) ($\Delta p = p_{max}$ cont.)	kW (HP)	o	@ n_{max}	41,7 (55.9)	50 (67.0)	56,9 (76,2)	64,8 (86.8)
		o	@ 2000 min^{-1}	26,1 (35.0)	34,5 (46.2)	40,6 (54.4)	49,8 (66.7)
		o	@ 1500 min^{-1}	19,6 (26.3)	25,9 (34.7)	30,5 (40.9)	37,4 (50.1)
Max. torque (theor.)	Nm (lbf in)	o	@ p_{max} cont.	124,5 (1102)	164,7 (1458)	194,1 (1718)	238 (2107)
			@ 100 bar (1450 psi)	54,1 (479)	71,6 (634)	84,4 (747)	103,5 (916)
Moment of inertia	kgm^2 (ft^2 lbs)			0,002 (0.05)	0,002 (0.05)	0,003 (0.07)	0,004 (0.09)
Fill volume	l (US gallons)			0,8 (0.21)	0,8 (0.21)	1 (0.26)	0,85 (0.22)
Mass (approx.)	kg (lbs)			16 (35.3)	16 (35.3)	19 (41.9)	19 (41.9)
Seals				N= Buna		V= Viton	
Operating temperature	°C (°F)		min.	-25 (-13)		-15 (5)	
			max. cont.	80 (176)		110 (230)	
			max. peak	100 (212)		125 (257)	

o 02/05.2021

(1) With an inlet pressure of 1 bar abs (14.5 psi) and viscosity between 15 and 35 cSt (77 and 163 SSU).
Reducing the displacement or increasing the inlet pressure the max. speed change. See table at page 10.
Max. speed limit are: MVPD 30: 3200 min^{-1} - MVPD 48: 2800 min^{-1}
Please contact us for different working conditions.

FEATURES

Technical data restrictions with fire resistant fluid

(1) = with an inlet pressure of 1 bar abs (14.5 psi) and viscosity between 15 and 35 cSt (77 and 163 SSU).

HFA - Oil emulsion in water (5 ÷ 15 % of oil)

Pump type MVPD			30·34	30·45	48·53	48·65
Max. outlet pressure p_{max}	bar (psi)	p_1	140 (2030)			
		p_2	150 (2175)			
		p_3	160 (2320)			
Max. speed n_{max}	min^{-1}	@ V_{max} (1)	1800	2000	1700	2000
Seals			N= Buna			
Operating temperature	°C (°F)	min.	2 (36)			
		max.	55 (131)			
Bearing life (ref. mineral oil)	%		20 %			

HFB - Water emulsion in oil (40 % of water)

Pump type MVPD			30·34	30·45	48·53	48·65
Max. outlet pressure p_{max}	bar (psi)	p_1	160 (2320)			
		p_2	170 (2465)			
		p_3	180 (2610)			
Max. speed n_{max}	min^{-1}	@ V_{max} (1)	1900	2150	1800	2150
Seals			N= Buna			
Operating temperature	°C (°F)	min.	2 (36)			
		max.	60 (140)			
Bearing life (ref. mineral oil)	%		40 %			

HFC - Water-glycol (35 ÷ 55 % of water)

Pump type MVPD			30·34	30·45	48·53	48·65
Max. outlet pressure p_{max}	bar (psi)	p_1	180 (2610)			
		p_2	195 (2828)			
		p_3	210 (3045)			
Max. speed n_{max}	min^{-1}	@ V_{max} (1)	1900	2150	1800	2150
Seals			N= Buna			
Operating temperature	°C (°F)	min.	-10 (14)			
		max.	60 (140)			
Bearing life (ref. mineral oil)	%		40 %			

02/05.2021

FEATURES

Technical data restrictions with fire resistant fluid

(1) = with an inlet pressure of 1 bar abs (14.5 psi) and viscosity between 15 and 35 cSt (77 and 163 SSU).

HFD - Phosphate ester

Pump type MVPD			30·34	30·45	48·53	48·65
Max. outlet pressure p_{max}	bar (psi)	p_1	200 (2900)			
		p_2	220 (3190)			
		p_3	240 (3480)			
Max. speed n_{max}	min^{-1}	@ V_{max} (1)	1900	2150	1800	2150
Seals			V= Viton			
Operating temperature	°C (°F)	min.	-10 (14)			
		max.	80 (176)			
Bearing life (ref. mineral oil)	%		90 %			

Technical data restrictions with biodegradable fluids

HETG - Natural based fluid (the water content must never exceed 0,1 %)

Pump type MVPD			30·34	30·45	48·53	48·65
Max. outlet pressure p_{max}	bar (psi)	p_1	180 (2610)			
		p_2	195 (2828)			
		p_3	210 (3045)			
Max. speed n_{max}	min^{-1}	@ V_{max} (1)	1900	2150	1800	2150
Seals			N= Buna			
Operating temperature	°C (°F)	min.	-10 (14)			
		max.	60 (140)			
Bearing life (ref. mineral oil)	%		50 %			

HEPG - Polyglycol based synthetic fluid (the water content must never exceed 0,1 %)

Pump type MVPD			30·34	30·45	48·53	48·65
Max. outlet pressure p_{max}	bar (psi)	p_1	180 (2610)			
		p_2	195 (2828)			
		p_3	210 (3045)			
Max. speed n_{max}	min^{-1}	@ V_{max} (1)	1900	2150	1800	2150
Seals			V= Viton			
Operating temperature	°C (°F)	min.	-15 (5)			
		max.	90 (194)			
Bearing life (ref. mineral oil)	%		75 %			

HEES - Synthetic esters (the water content must never exceed 0,1 %)

Pump type MVPD			30·34	30·45	48·53	48·65
Seals			V= Viton			
Operating temperature	°C (°F)	min.	-15 (5)			
		max.	80 (176)			
Bearing life (ref. mineral oil)	%		100 %			

02/05.2021

FEATURES

Design calculations for pump

Q	l/min (US gpm)	Flow
M	Nm (lbf in)	Torque
P	kW (HP)	Power
V	cm^3/rev (in^3/rev)	Displacement
n	min^{-1}	Speed
Δp	bar (psi)	Pressure
$\eta_v = \eta_v$ (V, Δp, n)		Volumetric efficiency
$\eta_{hm} = \eta_{hm}$ (V, Δp, n)		Hydro-mechanical efficiency
$\eta_t = \eta_v \bullet \eta_{hm}$		Overall efficiency

$$Q = Q_{theor.} \bullet \eta_v$$

$$Q_{theor.} = \frac{V\ (cm^3/rev) \bullet n\ (min^{-1})}{1000} \quad [l/min]$$

$$M = \frac{M_{theor.}}{\eta_{hm}}$$

$$M_{theor.} = \frac{\Delta p\ (bar) \bullet V\ (cm^3/rev)}{62{,}83} \quad [Nm]$$

$$P_{IN} = \frac{P_{OUT}}{\eta_t}$$

$$P_{OUT} = \frac{\Delta p\ (bar) \bullet Q\ (l/min)}{600} \quad [kW]$$

Max. permissible load on drive shaft

Pump type				MVPD 30•34	MVPD 30•45	MVPD 48•53	MVPD 48•65
F_{ax} Axial force		N (lbf)		800 (180)	800 (180)	1200 (270)	1200 (270)
F_{rad} Radial force	@ L/2	N (lbf)		1200 (270)	1200 (270)	1200 (270)	1200 (270)

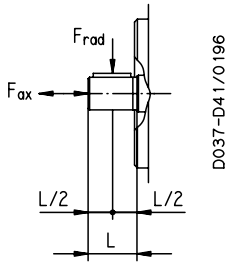

% Variation of the max. speed in relation of the inlet pressure and/or displacement reduction

Inlet pressure	Displacement %				
bar abs (psi)	65	70	80	90	100
0,8 (12)	110	106	100	95	90
0,9 (13)	110	110	103	100	95
1,0 (14.5)	110	110	106	103	100
1,2 (17)	110	110	110	106	103
1,4 (20)	110	110	110	110	106
1,6 (23)	110	110	110	110	110
2,0 (29)	110	110	110	110	100

% Variation of the max. speed

Max. speed must not exceed the limits specified at page 7.

Example 1
Displacement: 100 %
Speed: 100 %
Inlet pressure: 1,0 bar abs. (14.5 psi)

Example 2
Displacement: 80 %
Inlet pressure: 1,0 bar abs. (14.5 psi)
Speed: 106 %

FEATURES

Definition of rotation direction looking at the drive shaft

Anti-clock rotation

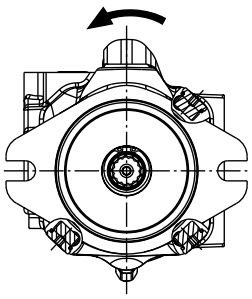

Side ports

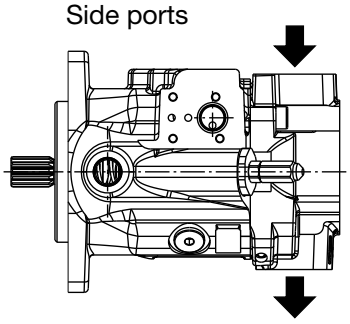

Rear ports

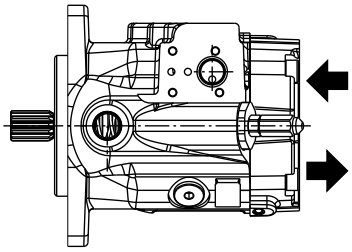

Clockwise rotation

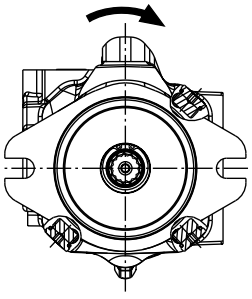

Side ports

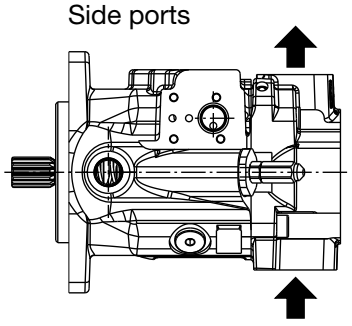

Rear ports

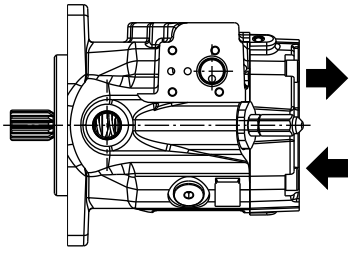

01/01.2013

DISPLACEMENT SETTING

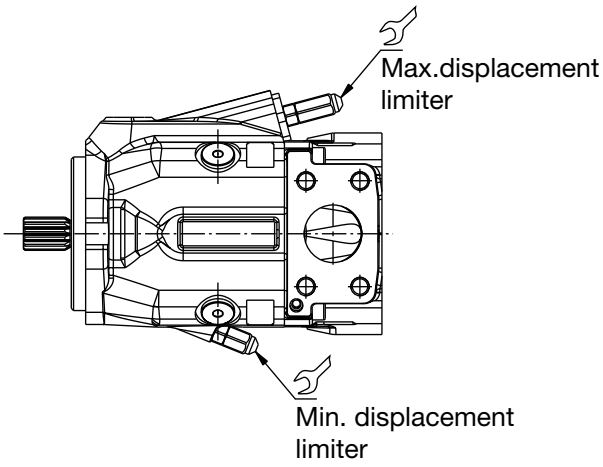

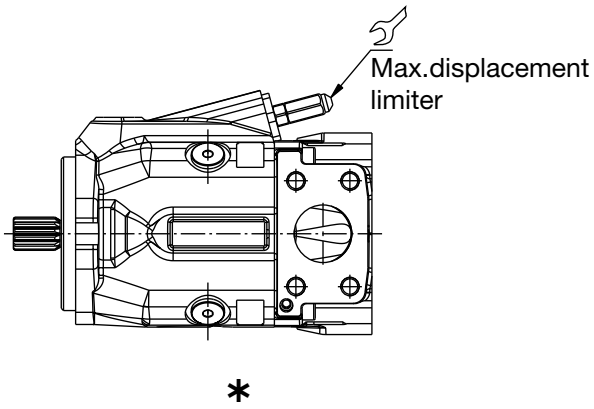

E: Max. displacement limiter (Min displacement limiter is plugged)

G: Min. and Max. displacement limiter

Tightening torque 15±1 Nm (124 ÷ 142 lbf in)

* Special body without Min. displacement limiter is available only on request, please contact us for more information

			MVPD30	MVPD48
Max. displacement setting range	cm³/rev (in³/rev)	from	22,5 (1.37)	45,1 (2.75)
		to	45 (2.74)	65 (3.97)
Min. displacement setting range	cm³/rev (in³/rev)	from	0	0
		to	22,5 (1.37)	13 (0.79)
One turn of screw changes pump displacement by approximately	cm³/rev (in³/rev)	E	4 (0.24)	4,1 (0.25)
		F	3,3 (0.20)	3,8 (0.23)

Please contact us for different setting range.

CENTER OF GRAVITY

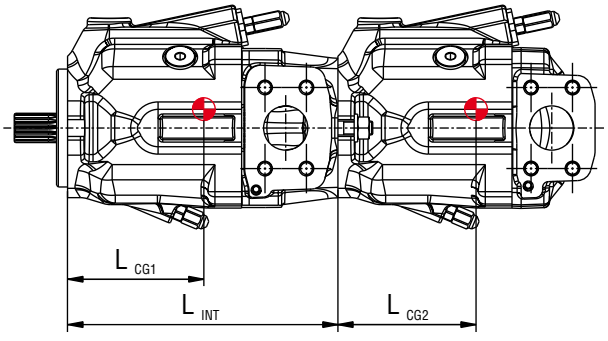

Center of gravity

$$M_{MF} = \frac{L_{CG1} \bullet m_1 + (L_{INT} + L_{CG2}) \bullet m_2}{102} \quad [Nm]$$

M_{MF}: Load moment on mounting flange

L_{CG}: Distance from center of gravity to mounting flange [mm]

m : Weight (kg)

		MVPD30	MVPD48
L_{CG1}	mm (in)	107 (4.21)	-
L_{CG2}	mm (in)	98 (3.86)	107 (4.21)
L_{INT}	mm (in)	217 (8.54)	-

For single pumps refer to L_{CG2} values
Avarage data, please contact us for for specific values.

Replaces: 01/01.2013
02/05.2021

MVPD30•34 OPERATING CURVES

Each curve has been obtained at 50 °C (122 °F), using oil with viscosity 46 cSt (210 SSU) at 40 °C (104 °F) and at these speed: (1) 1500 min^{-1}
(2) 2000 min^{-1}
(3) 3200 min^{-1}

Delivery / power
@ max. displacement

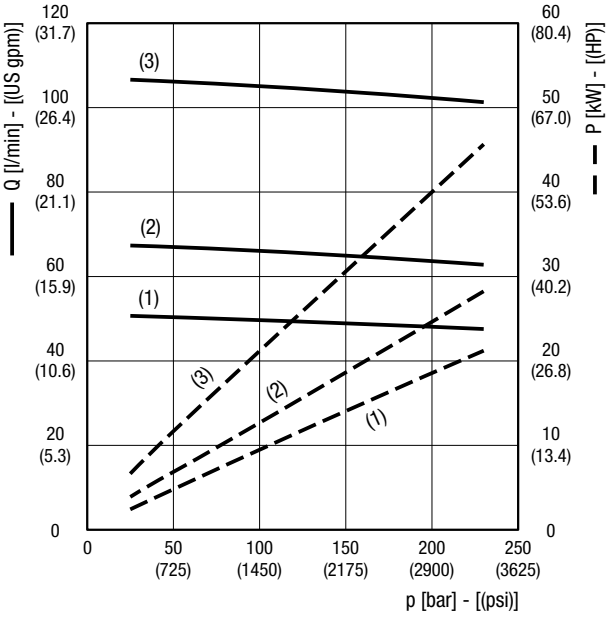

Noise level Distance from microphone to pump = 1 m (39.37 in)

——— @ max. displacement — — — @ min. displacement

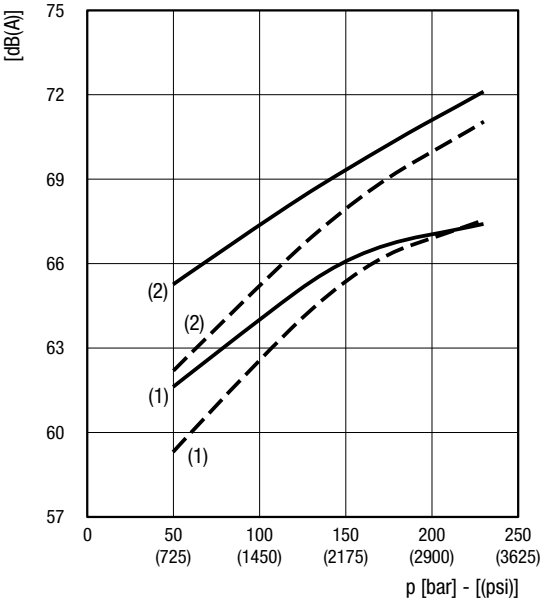

Volumetric efficiency
@ max. displacement

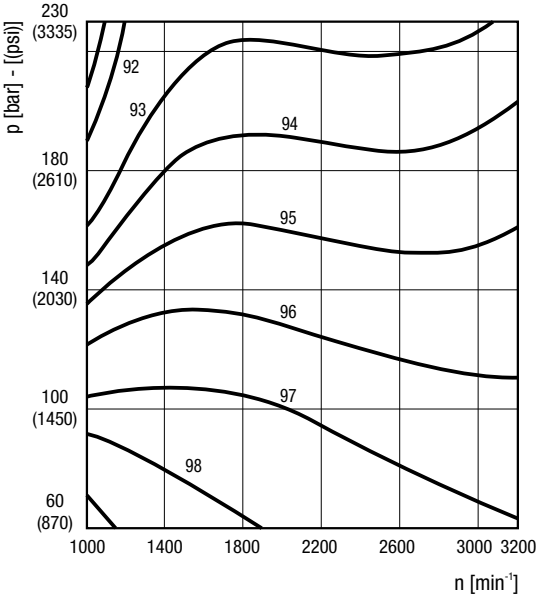

Overall efficiency
@ max. displacement

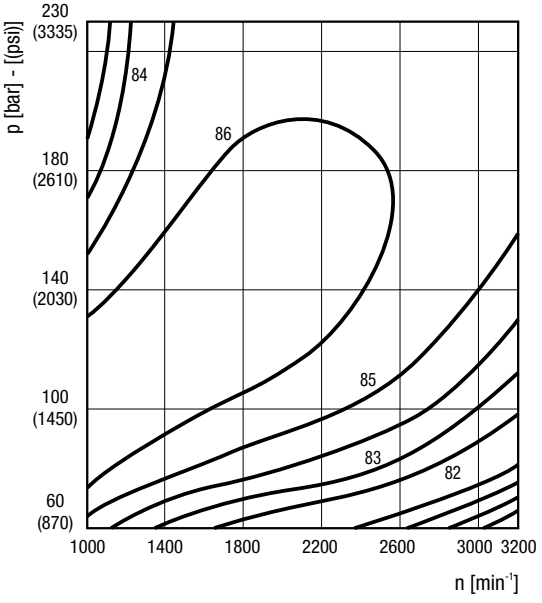

Values shown in the diagrams are indicative only. Actual values may vary depending on the pump configuration.

MVPD30•45 OPERATING CURVES

Each curve has been obtained at 50 °C (122 °F), using oil with viscosity 46 cSt (210 SSU) at 40 °C (104 °F) and at these speed:
(1) 1500 min^{-1}
(2) 2000 min^{-1}
(3) 2900 min^{-1}

Delivery / power
@ max. displacement

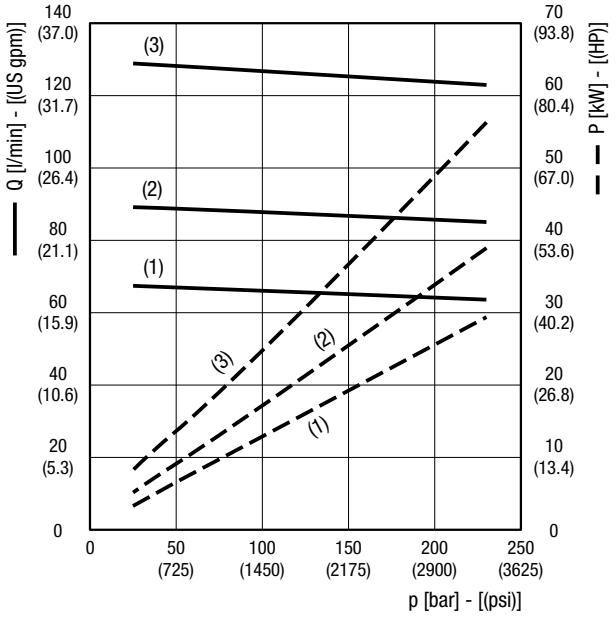

Noise level Distance from microphone to pump = 1 m (39.37 in)

——— @ max. displacement — — — @ min. displacement

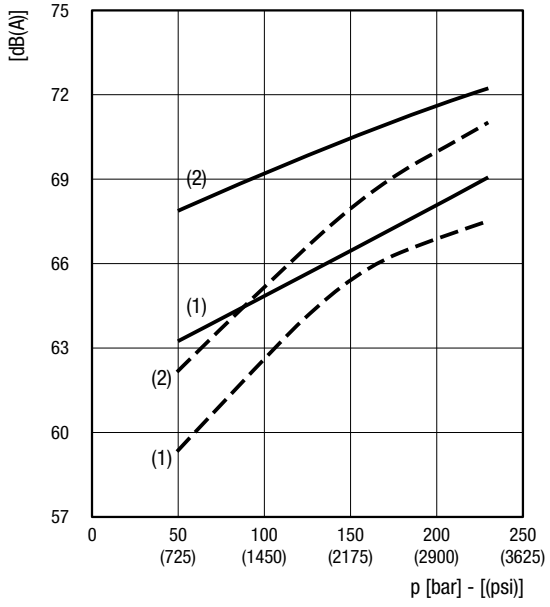

Volumetric efficiency
@ max. displacement

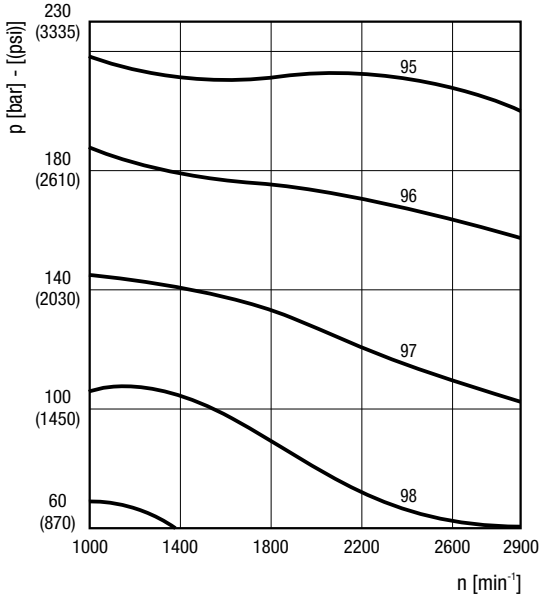

Overall efficiency
@ max. displacement

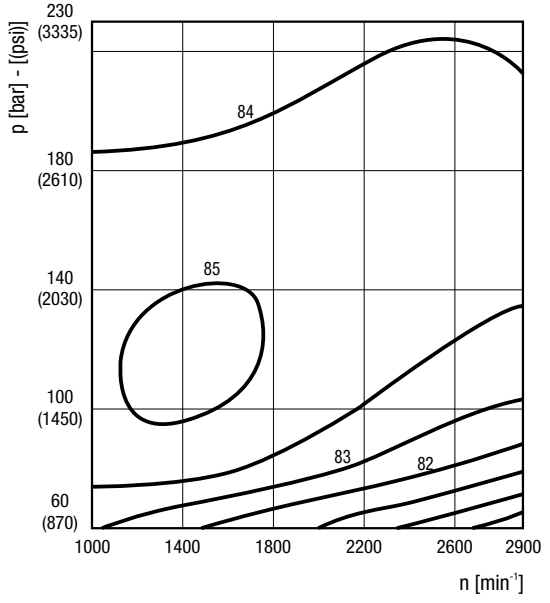

Values shown in the diagrams are indicative only. Actual values may vary depending on the pump configuration.

MVPD48•53 OPERATING CURVES

Each curve has been obtained at 50 °C (122 °F), using oil with viscosity 46 cSt (210 SSU) at 40 °C (104 °F) and at these speed: (1) 1500 min^{-1}
(2) 2000 min^{-1}
(3) 2800 min^{-1}

Delivery / power
@ max. displacement

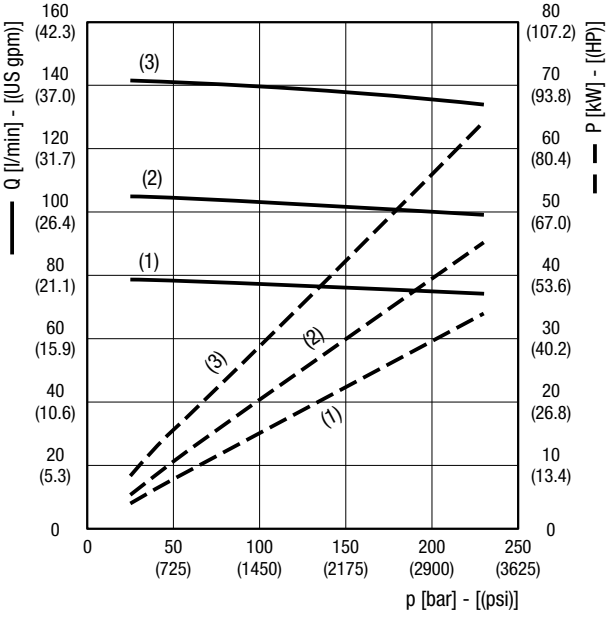

Noise level Distance from microphone to pump = 1 m (39.37 in)

——— @ max. displacement — — — @ min. displacement

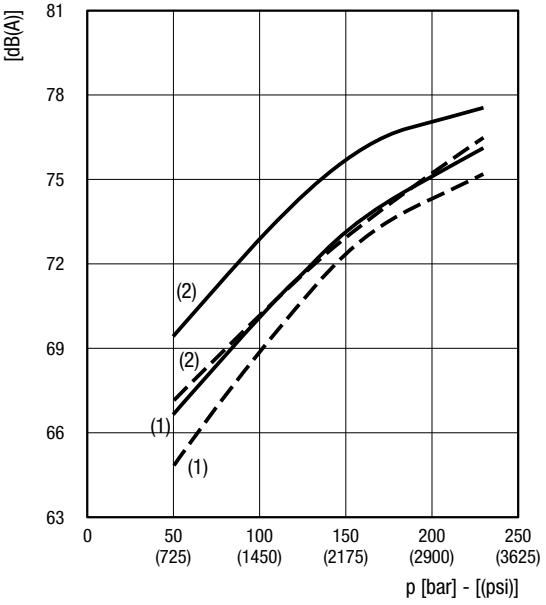

Volumetric efficiency
@ max. displacement

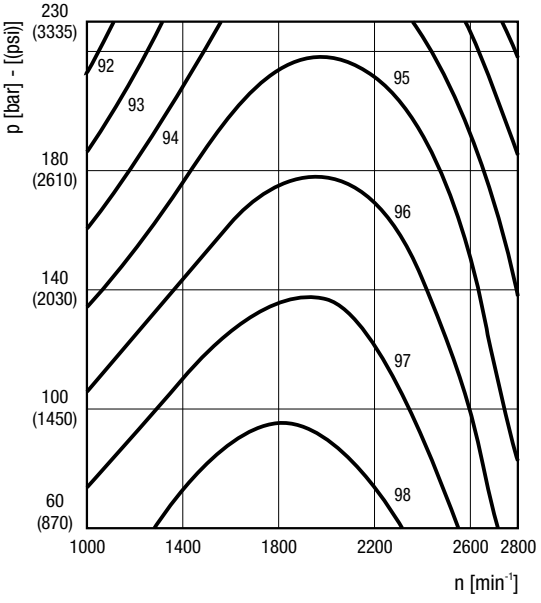

Overall efficiency
@ max. displacement

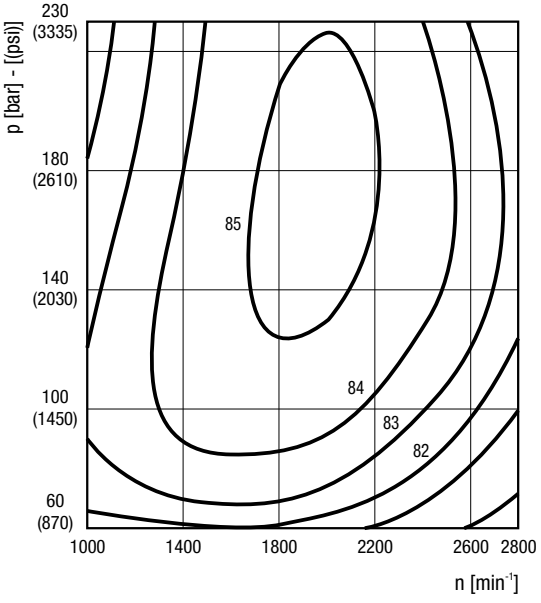

Values shown in the diagrams are indicative only. Actual values may vary depending on the pump configuration.

MVPD48•65 OPERATING CURVES

Each curve has been obtained at 50 °C (122 °F), using oil with viscosity 46 cSt (210 SSU) at 40 °C (104 °F) and at these speed: (1) 1500 min^{-1}
(2) 2000 min^{-1}
(3) 2600 min^{-1}

Delivery / power
@ max. displacement

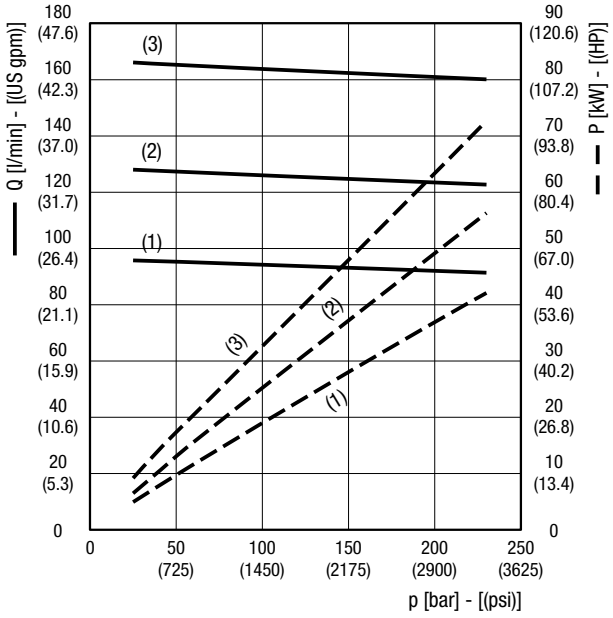

Noise level Distance from microphone to pump = 1 m (39.37 in)

——— @ max. displacement — — — @ min. displacement

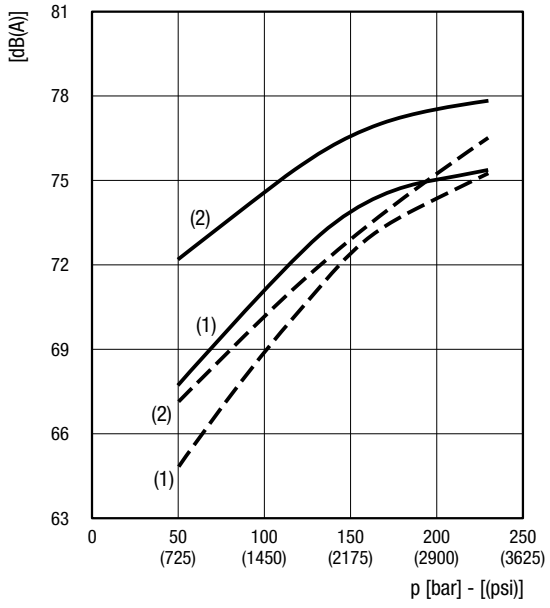

Volumetric efficiency
@ max. displacement

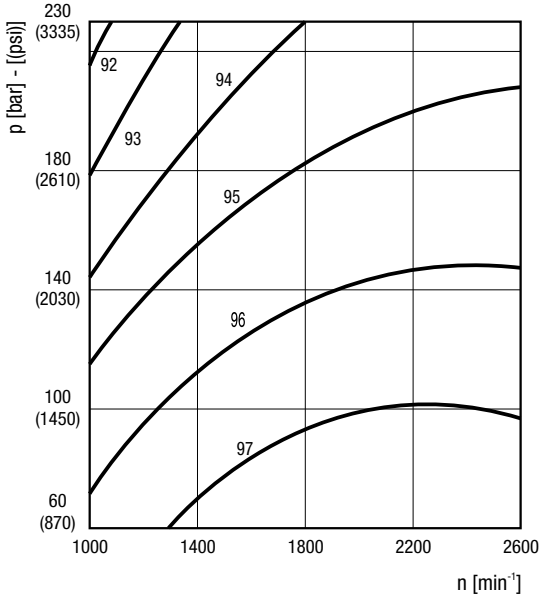

Overall efficiency
@ max. displacement

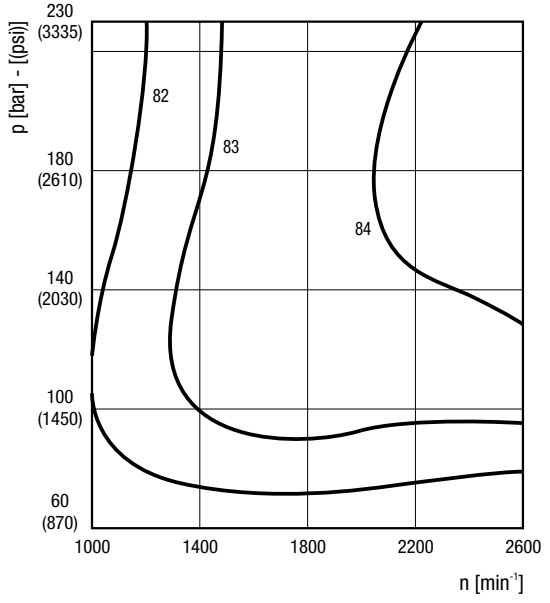

Values shown in the diagrams are indicative only. Actual values may vary depending on the pump configuration.

MVPD30 SINGLE PUMPS DIMENSIONS - SIDE PORTS L

Drive shafts: see pages 25
Mounting flanges: see pages 27
Ports: see pages 28 ÷ 30

Replaces: 01/01.2013

o

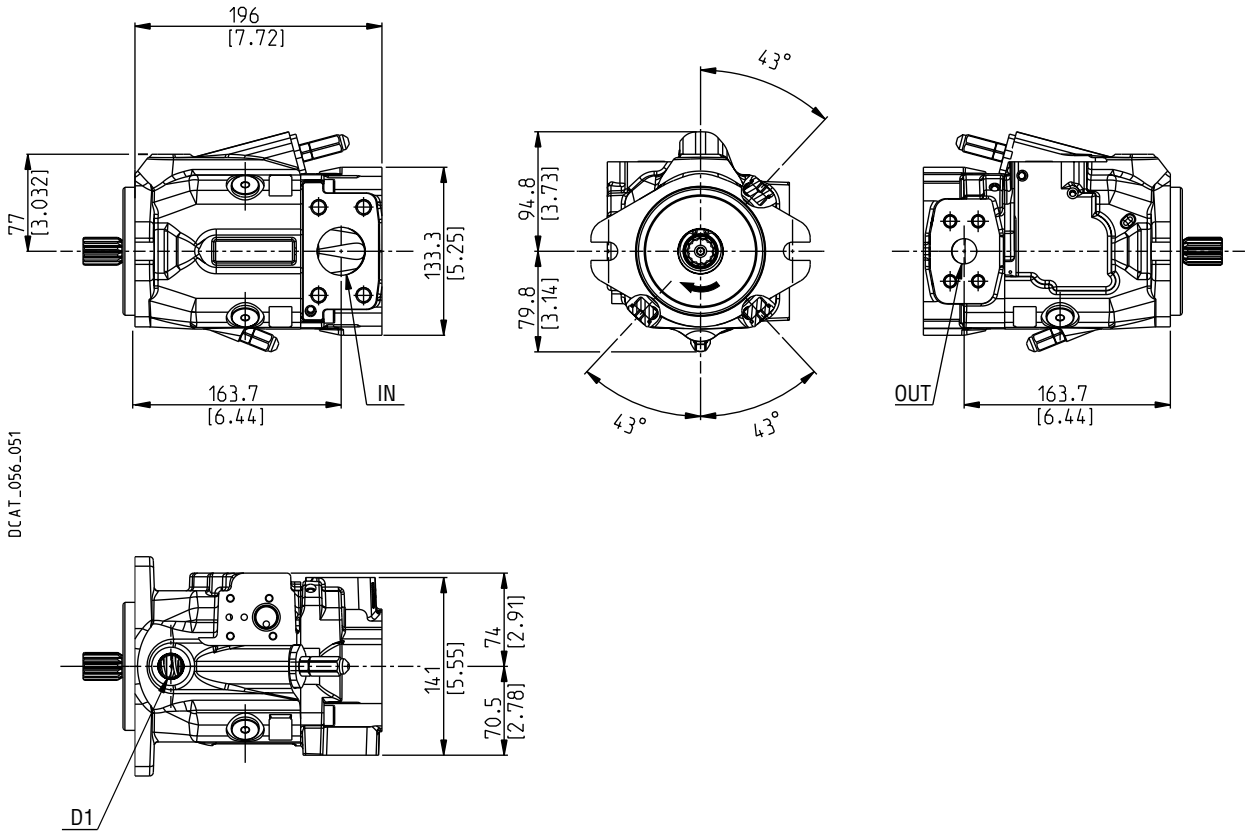

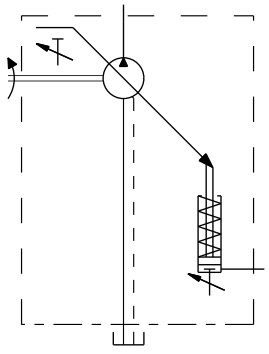

o 02/05.2021

MVPD30 SINGLE PUMPS DIMENSIONS - REAR PORTS P

Drive shafts: see pages 25
Mounting flanges: see pages 27
Ports: see pages 28 ÷ 30

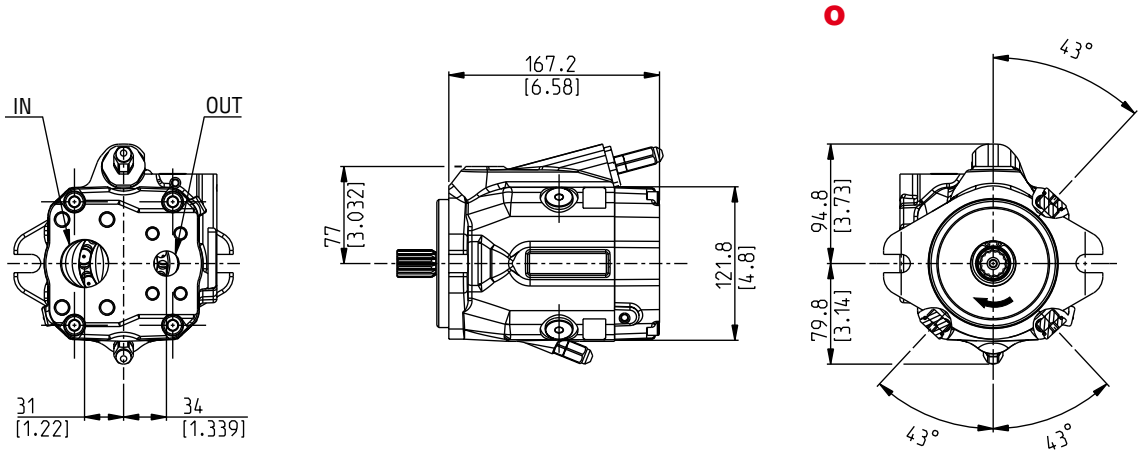

DCAT_056_052

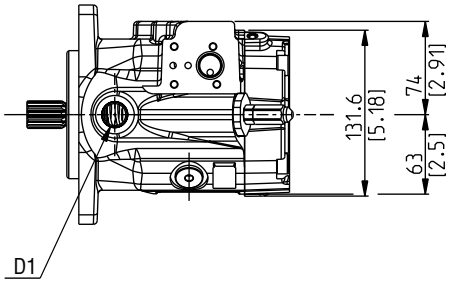

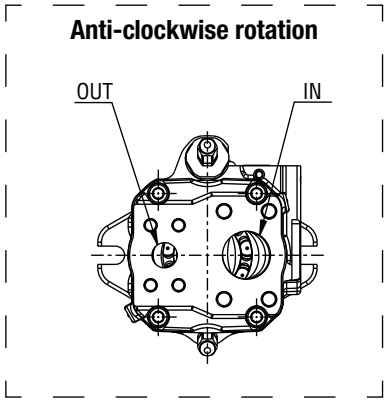

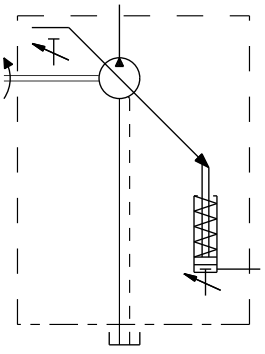

Replaces: 01/01.2013

02/05.2021

MVPD30/KP20 MULTIPLE PUMPS DIMENSIONS L

Common inlet intermediate flange:
MVPD code **P7**
KP20 code **N5**

Drive shafts: see pages 25
Mounting flanges: see pages 27
Ports: see pages 28 ÷ 30

Replaces: 01/01.2013

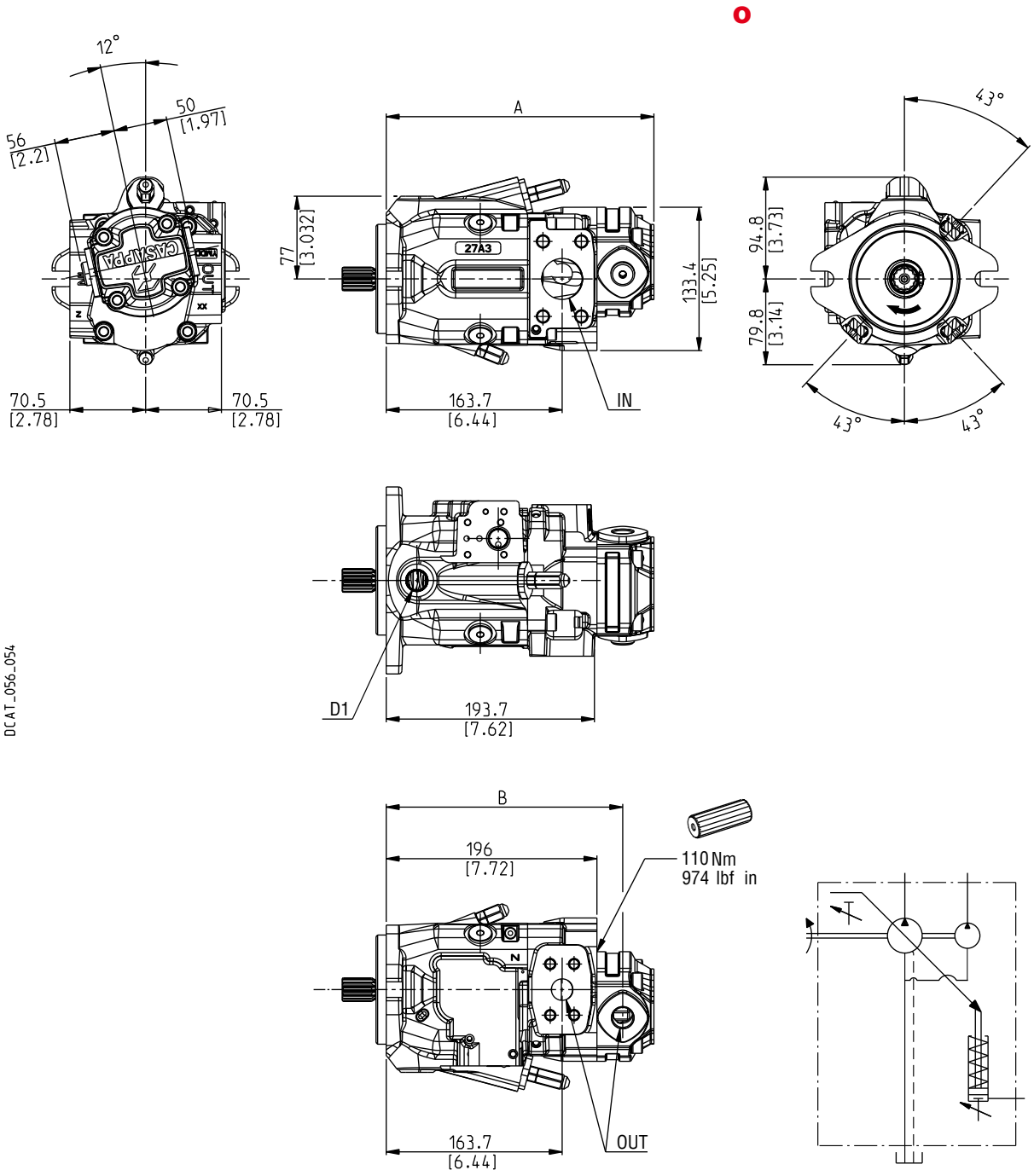

02/05.2021

Gear pump KAPPA 20 (for more information please see the respective technical catalogue)

Pump type	20•4	20•6,3	20•8	20•11,2	20•14	20•16	20•20	Dimensions	
MVPD30	249 (9.8031)	251,5 (9.9016)	254 (10.0000)	257,5 (10.1378)	261,5 (10.2953)	267 (10.5118)	273,5 (10.7677)	mm (in)	A
	220 (8.6614)	222,5 (8.7598)	225 (8.8583)	228,5 (8.9961)	227 (8.9370)	232,5 (9.1535)	239 (9.4094)	mm (in)	B

MVPD30/PHP20 MULTIPLE PUMPS DIMENSIONS L

Common inlet intermediate flange:
MVPD code **I7**
PHP20 code **S7**

Drive shafts: see pages 25
Mounting flanges: see pages 27
Ports: see pages 28 ÷ 30

Also available in combination with PLP20

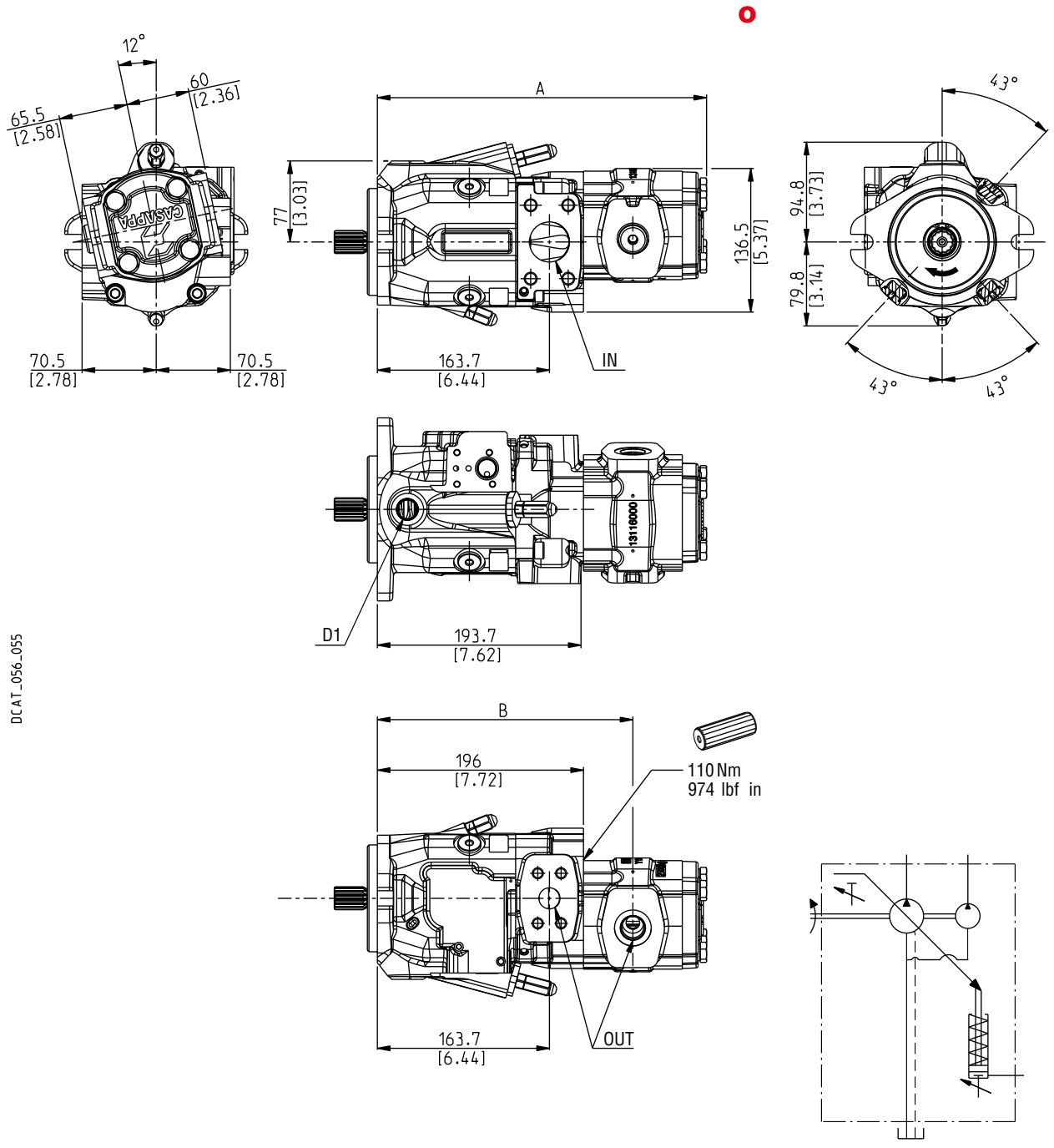

Replaces: 01/01.2013

02/05.2021

Gear pump POLARIS PH20 (for more information please see the respective technical catalogue)

Pump type	8	10,5	11,2	14	16	18	19	20	23	24,5	25	27,8	31,5	Dimensions	
MVPD30	274,6 (10.81)	278,6 (10.97)	279,1 (10.99)	284,1 (11.41)	287,6 (11.32)	289,8 (11.41)	291 (11.46)	294,1 (11.58)	297,6 (11.72)	299,9 (11.81)	301,6 (11.87)	304,4 (11.98)	311,6 (12.27)	mm (in)	A
	228 (8.98)	231 (9.09)	231,5 (9.11)	236,5 (9.31)	239,5 (9.43)	230,4 (9.07)	231 (9.09)	232,5 (9.15)	234,2 (9.22)	235,3 (9.26)	236,5 (9.31)	237,9 (9.36)	241,5 (9.51)	mm (in)	B

MVPD48 SINGLE PUMPS DIMENSIONS - SIDE PORTS L

Drive shafts: see pages 26
Mounting flanges: see pages 27
Ports: see pages 28 ÷ 30

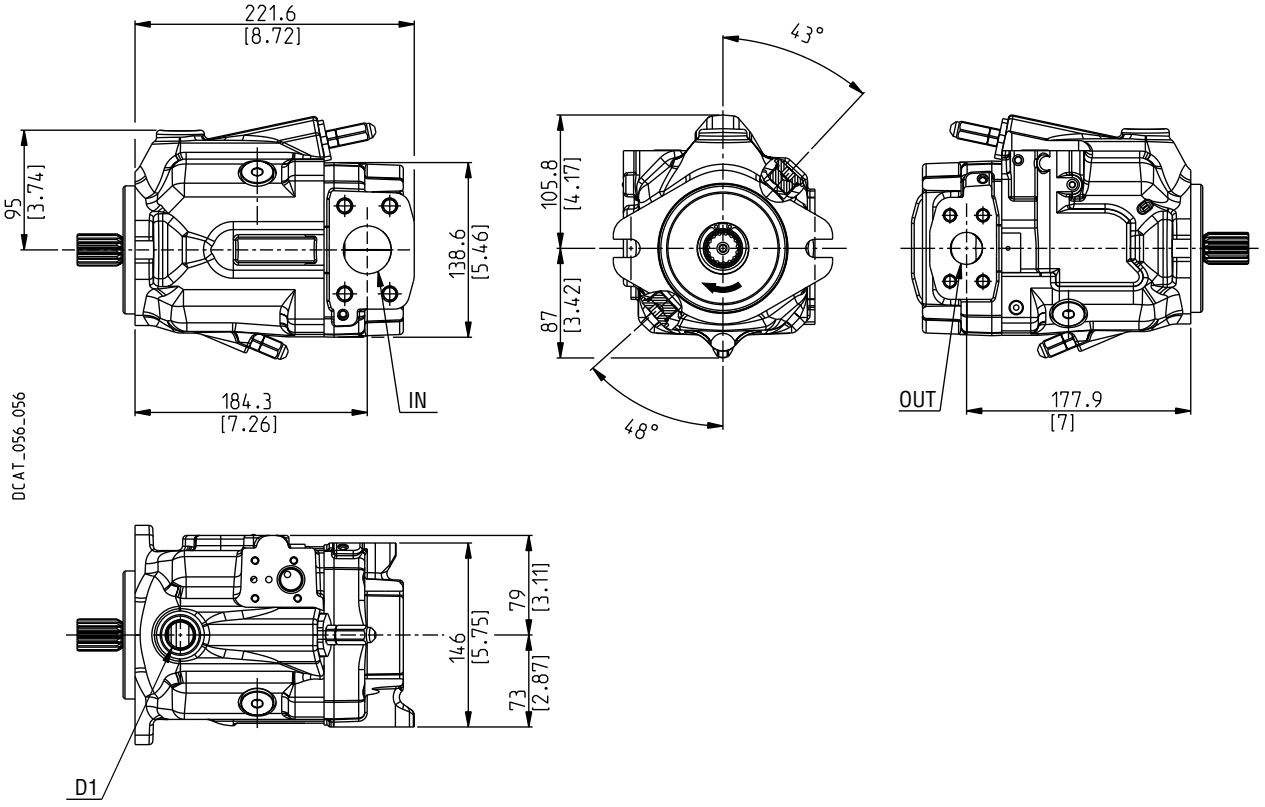

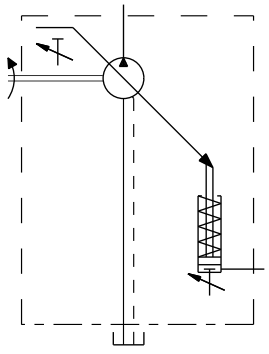

02/05.2021

MVPD48 SINGLE PUMPS DIMENSIONS - REAR PORTS P

Drive shafts: see pages 26
Mounting flanges: see pages 27
Ports: see pages 28 ÷ 30

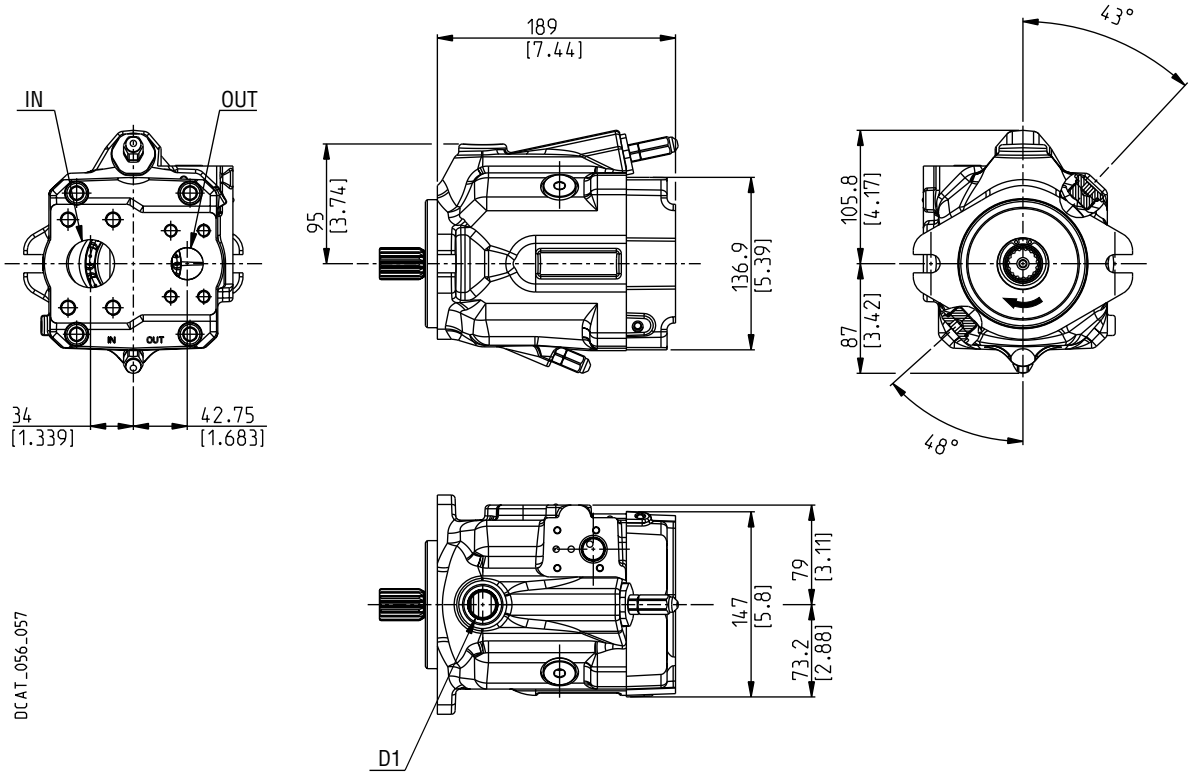

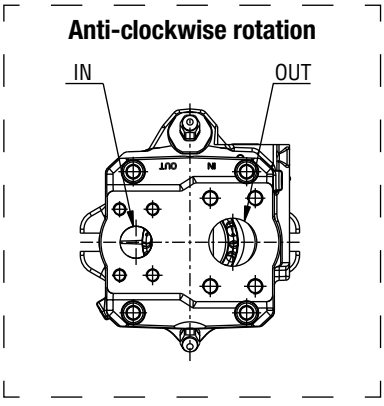

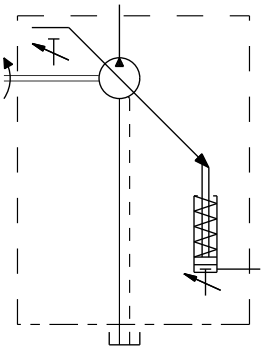

02/05.2021

MVPD48/KP20 MULTIPLE PUMPS DIMENSIONS L

Common inlet intermediate flange:
MVPD code **P7**
KP20 code **N5**

Drive shafts: see pages 26
Mounting flanges: see pages 27
Ports: see pages 28 ÷ 30

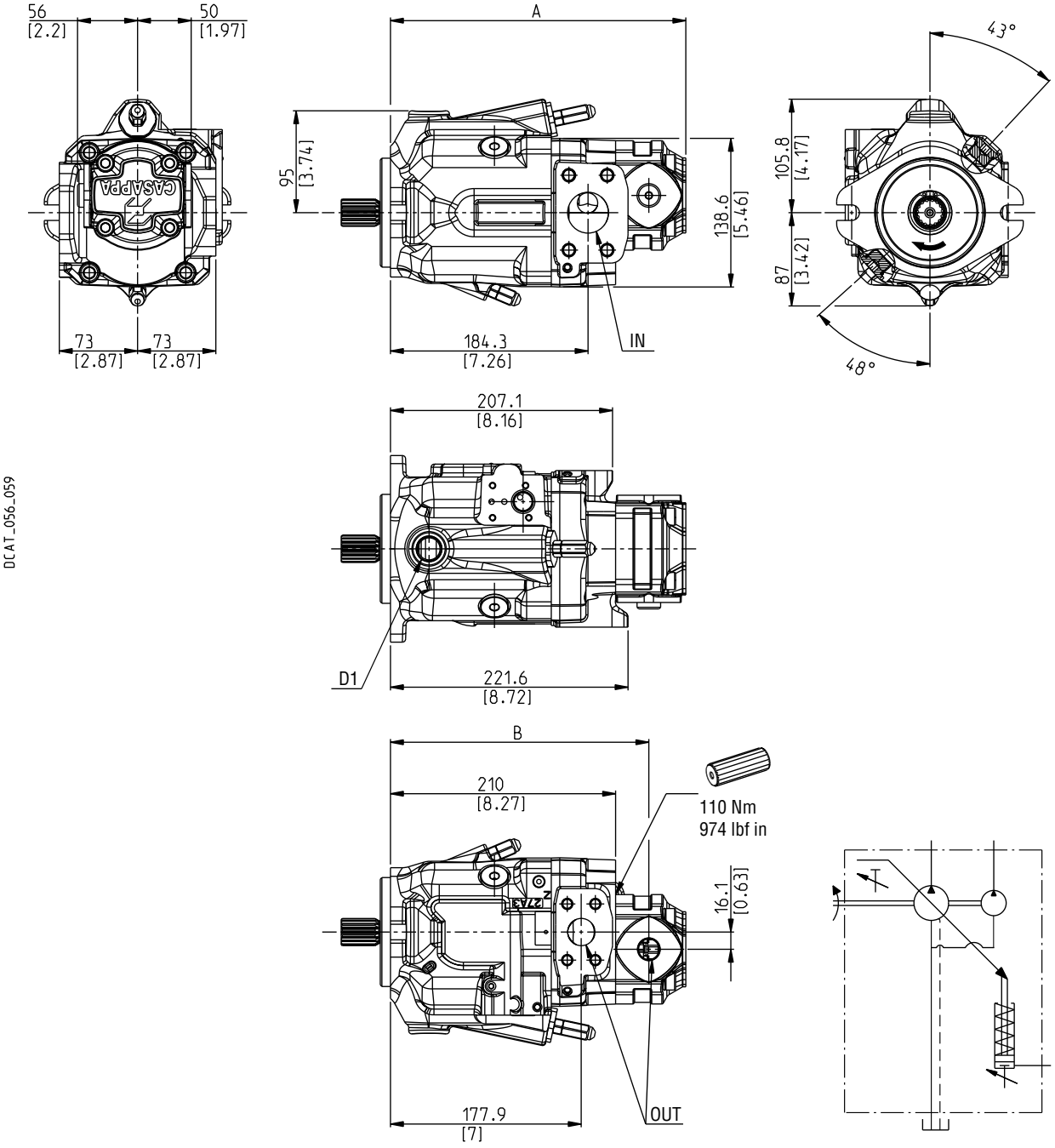

Gear pump KAPPA 20 (for more information please see the respective technical catalogue)

Pump type	4	6,3	8	11,2	14	16	20	Dimensions	
MVPD48	263 (10.35)	265,5 (10.45)	268 (10.55)	271,5 (10.69)	275,5 (10.85)	281 (11.06)	287,5 (11.32)	mm (in)	A
	234 (9.21)	236,5 (9.31)	239 (9.41)	242,5 (9.55)	241 (9.49)	246,5 (9.70)	253 (9.96)	mm (in)	B

02/05.2021

MVPD48/PHP20 MULTIPLE PUMPS DIMENSIONS L

Common inlet intermediate flange:
MVPD code **I7**
PHP20 code **S7**

Drive shafts: see pages 26
Mounting flanges: see pages 27
Ports: see pages 28 ÷ 30

Also available in combination with PLP20

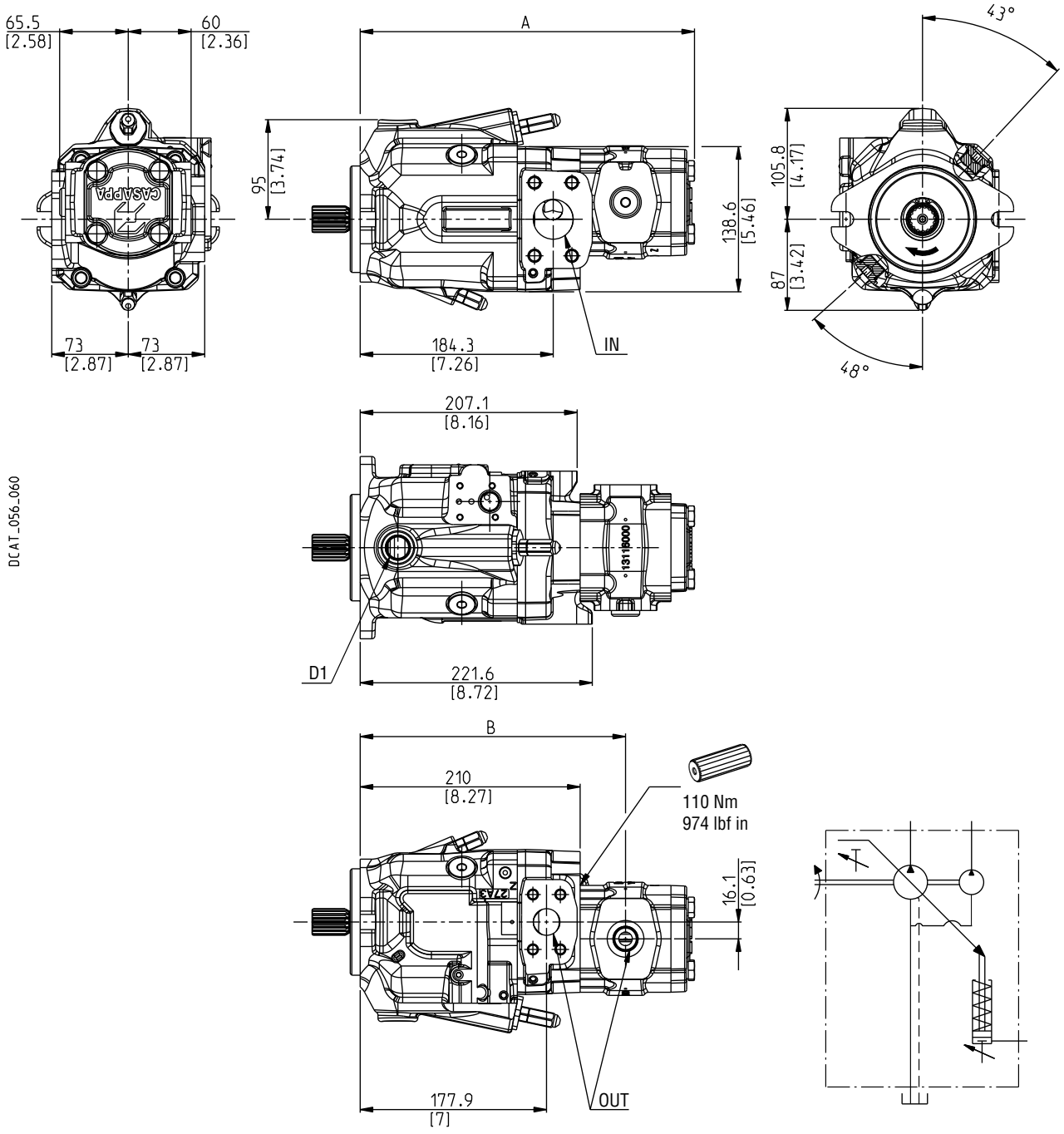

Gear pump POLARIS PH20 (for more information please see the respective technical catalogue)

Pump type	8	10,5	11,2	14	16	18	19	20	23	24,5	25	27,8	31,5	Dimensions	
MVPD48	290,1 (11.42)	294,1 (11.58)	294,6 (11.60)	299,6 (11.80)	303,1 (11.93)	305,3 (12.02)	306,5 (12.07)	309,6 (12.19)	313,1 (12.33)	315,4 (12.42)	317,1 (12.48)	319,9 (12.59)	327,1 (12.88)	mm (in)	A
	243,5 (9.59)	246,5 (9.70)	247 (9.72)	252 (9.92)	255 (10.04)	245,9 (9.68)	246,5 (9.70)	248 (9.76)	249,7 (9.83)	250,8 (9.87)	252 (9.92)	253,4 (9.97)	257 (10.12)	mm (in)	B

02/05.2021

MVPD30 DRIVE SHAFTS

Replaces: 01/01.2013

SAE "A" SPLINE 03

Mounting face refers to flange code **S1**

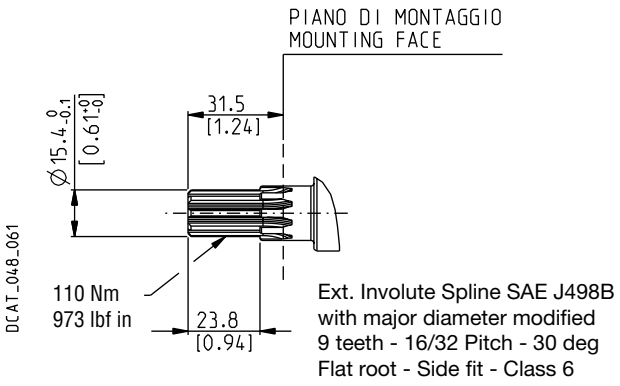

Ext. Involute Spline SAE J498B
with major diameter modified
9 teeth - 16/32 Pitch - 30 deg
Flat root - Side fit - Class 6

SAE SPLINE 07

Mounting face refers to flange code **S1**

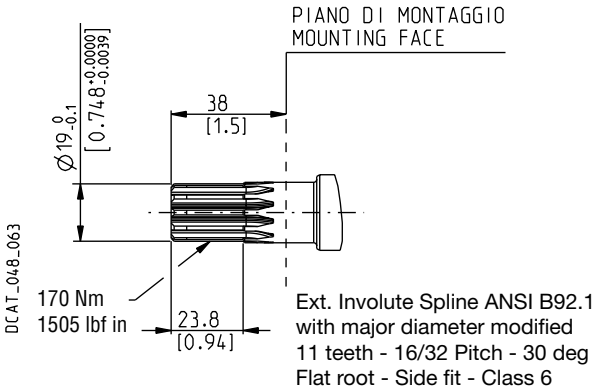

Ext. Involute Spline ANSI B92.1
with major diameter modified
11 teeth - 16/32 Pitch - 30 deg
Flat root - Side fit - Class 6

SAE "B" SPLINE 04

Mounting face refers to flange code **S5**

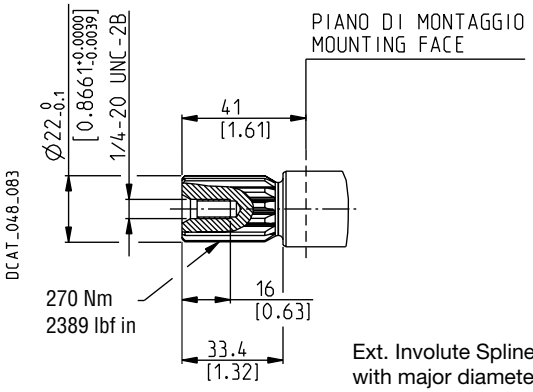

Ext. Involute Spline ANSI B92.1
with major diameter modified
13 teeth - 16/32 Pitch - 30 deg
Flat root - Side fit - Class 6

SAE "B" SPLINE 4R

Mounting face refers to flange code **S5**

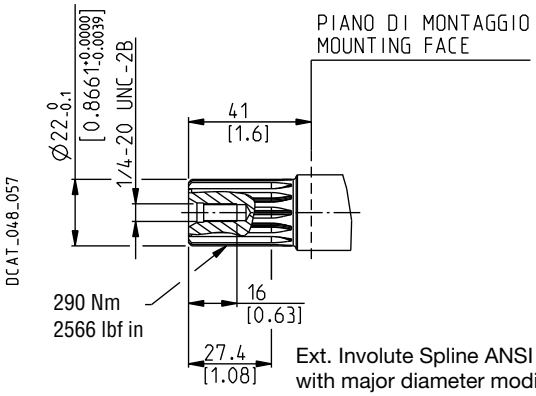

Ext. Involute Spline ANSI B92.1
with major diameter modified
13 teeth - 16/32 Pitch - 30 deg
Flat root - Side fit - Class 6

SAE "B" STRAIGHT 32

Mounting face refers to flange code **S5**

02/05.2021

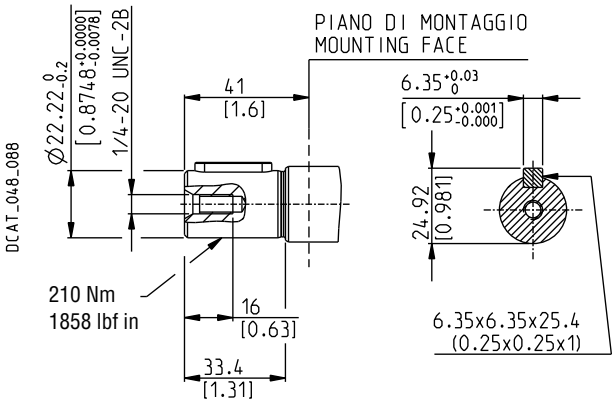

Please contact us for different drive shafts.

MVPD48 DRIVE SHAFTS

SAE "B" SPLINE 04

Mounting face refers to flange code **S5**

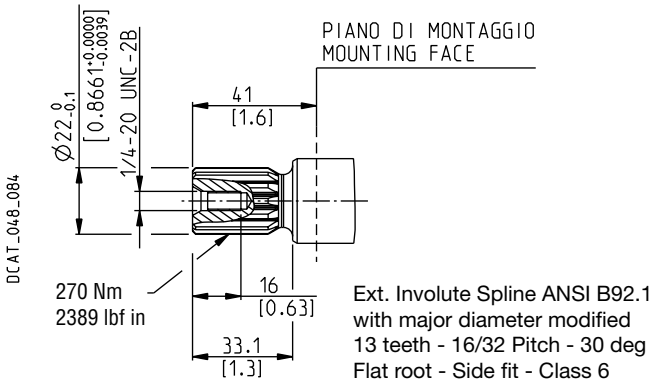

SAE "B" SPLINE 4R

Mounting face refers to flange code **S5**

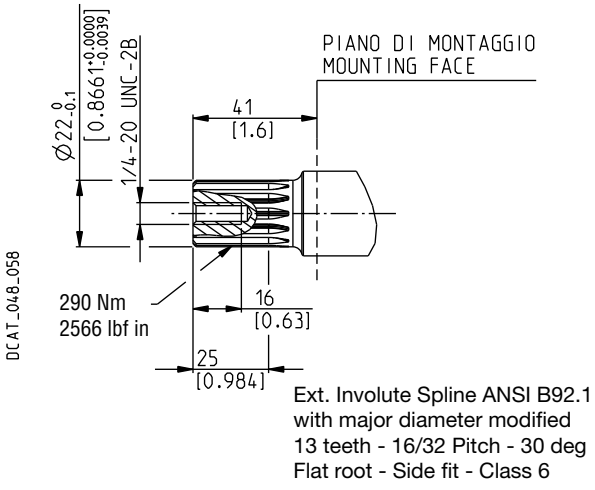

SAE "BB" SPLINE 05

Mounting face refers to flange code **S5**

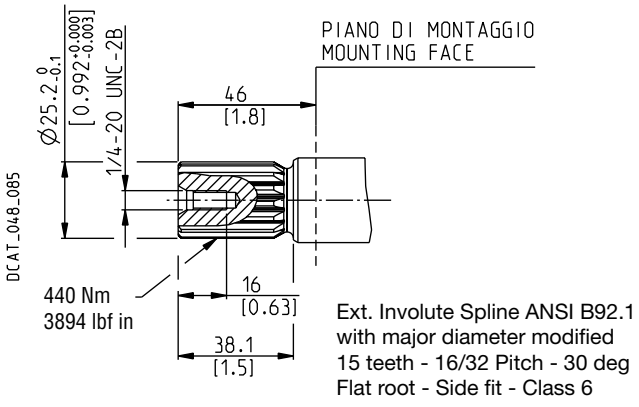

SAE "BB" SPLINE 5R

Mounting face refers to flange code **S5**

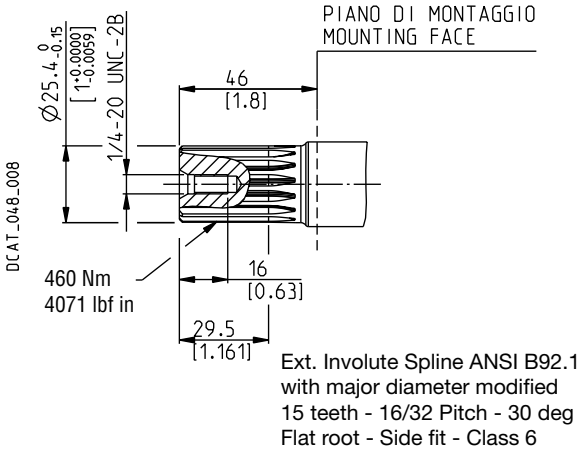

SAE "B" STRAIGHT 32

Mounting face refers to flange code **S5**

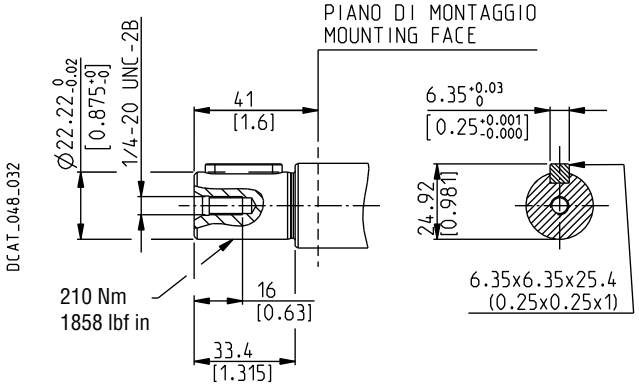

Please contact us for different drive shafts.

02/05.2021

MOUNTING FLANGES AND TABLE OF COMPATIBILITY

Replaces: 01/01.2013

SAE "A" 2 HOLES — S1

Conforms to SAE J744

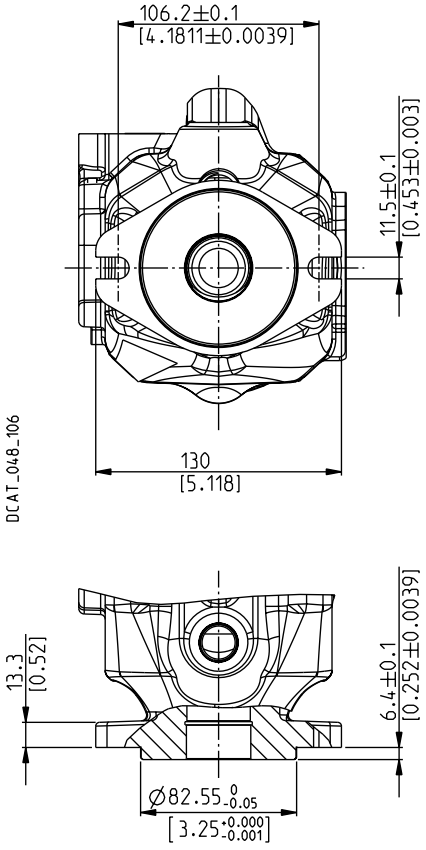

SAE "B" 2 HOLES — S5

Conforms to SAE J744

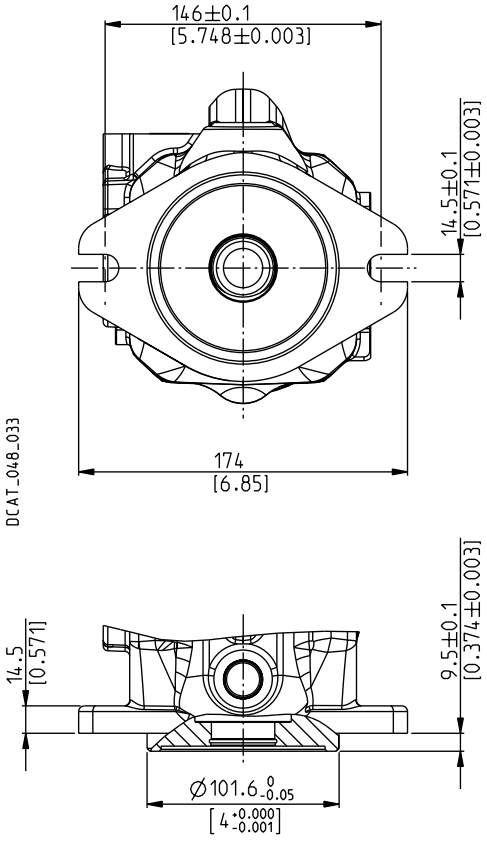

	DRIVE SHAFTS See page 25		
Pump type	03	07	04
MVPD30	X	X	X

X Available combination

O	DRIVE SHAFTS See page 25 ÷ 26				
Pump type	04	4R	32	05	5R
MVPD30	X	X	X		
MVPD48	X	X	X	X	X

X Available combination

O 02/05.2021

PORTS TYPE

	INLET / OUTLET PORTS				DRAIN PORTS		LOAD SENSING PORTS (X)		KP20 / PHP20 GEAR PUMPS	
Ports type	Split SSM		Split SSS		Gas BSPP	SAE ODT (●)	Gas BSPP (●)	SAE ODT	Gas BSPP	SAE ODT
	IN	OUT	IN	OUT	D1 - D2 - D3 - D4		X	X	OUT	OUT
MVPD30	ME	MB	SE	SB	—	OB	GA	03	GD	OC
MVPD48	ME	MC	SE	SC	GD	OC	GA	03	GD	OC

(X) Load sensing port.
(●) Standard.
Please contact us for more information.

Replaces: 01/01.2013

DRAIN PORTS POSITION

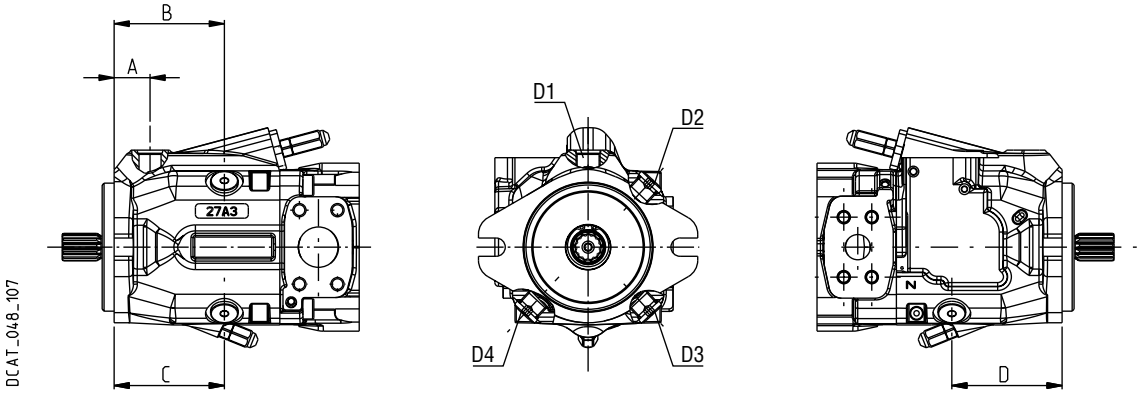

Pump type	A	B	C	D
	mm (in)	mm (in)	mm (in)	mm (in)
MVPD30	28,5 (1.12)	87,5 (3.44)	87,5 (3.44)	87,5 (3.44)
MVPD48	36 (1.42)	97 (3.82)	—	97 (3.82)

02/05.2021

PORTS SIZES

Tightening torque for low pressure side port

Tightening torque for high pressure side port

Replaces: 01/01.2013

SAE FLANGED PORTS J518 - Standard pressure series 3000 psi - Code 61 — SSM

Metric thread ISO 60° conforms to ISO/R 262

O

CODE	Nominal size	A	B	C	D		
		mm (in)	mm (in)	mm (in)	Thread Depth mm (in)	Nm (lbf in)	Nm (lbf in)
MB	3/4”	20 (0.79)	47,6 (1.87)	22,2 (0.87)	M 10 17 (0.67)	—	45 +2,5 (398 ÷ 420)
MC	1”	25,4 (1.00)	52,4 (2.06)	26,2 (1.03)	M 10 17 (0.67)	—	30 +2,5 (266 ÷ 288)
ME	1” 1/2	38,1 (1.50)	69,8 (2.75)	35,7 (1.41)	M 12 20 (0.79)	30 +2,5 (266 ÷ 288)	—

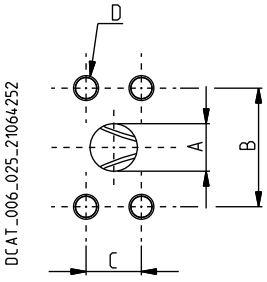

SAE FLANGED PORTS J518 - Standard pressure series 3000 psi - Code 61 — SSS

American straight thread UNC-UNF 60° conforms to ANSI B 1.1

O

CODE	Nominal size	A	B	C	D		
		mm (in)	mm (in)	mm (in)	Thread Depth mm (in)	Nm (lbf in)	Nm (lbf in)
SB	3/4”	20 (0.79)	47,6 (1.87)	22,2 (0.87)	3/8 - 16 UNC-2B 17 (0.67)	—	30 +2,5 (266 ÷ 288)
SC	1”	25,4 (1.00)	52,4 (2.06)	26,2 (1.03)	3/8 - 16 UNC-2B 17 (0.67)	—	35 +2,5 (310 ÷ 332)
SE	1” 1/2	38,1 (1.50)	69,8 (2.75)	35,7 (1.41)	1/2 - 13 UNC-2B 20 (0.79)	30 +2,5 (266 ÷ 288)	—

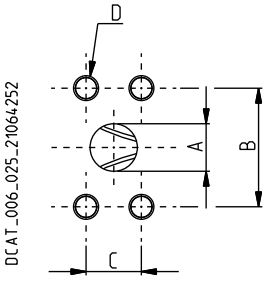

O 02/05.2021

PORTS SIZES

Tightening torque for low pressure side port

Tightening torque for high pressure side port

SAE STRAIGHT THREAD PORTS J514 — ODT

American straight thread UNC-UNF 60° conforms to ANSI B 1.1

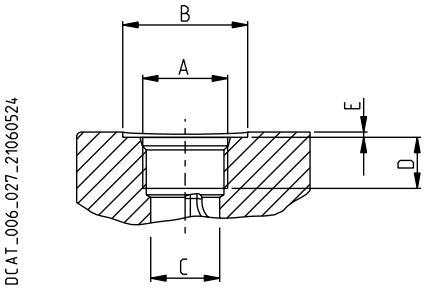

Replaces: 01/01.2013

O

CODE	Nominal size	A	Ø B	Ø C	D	E		
		mm (in)	mm (in)	mm (in)	mm (in)	mm (in)	Nm (lbf in)	Nm (lbf in)
03 (X)	1/4”	7/16” - 20 UNF - 2B	—	9,5 (0.37)	—	—	—	12 +1 (106 ÷ 115)
OB (●)	1/2”	3/4” - 16 UNF - 2B	33 (1.30)	17 (0.67)	—	1 (0.04)	20 +1 (177 ÷ 186)	—
OC (●)	5/8”	7/8” - 14 UNF - 2B	35 (1.38)	20,5 (0.81)	—	2 (0.08)	30 +2,5 (266 ÷ 288)	—
OC (◆)			34 (1.34)	20,5 (0.81)	17 (0.67)	0,5 (0.02)	—	70 +5 (620 ÷ 664)

(X) = Load sensing port - (●) = Drain port - (◆) = KP20 / PHP20 outlet port

GAS STRAIGHT THREAD PORTS — BSPP

British standard pipe parallel (55°) conforms to UNI - ISO 228

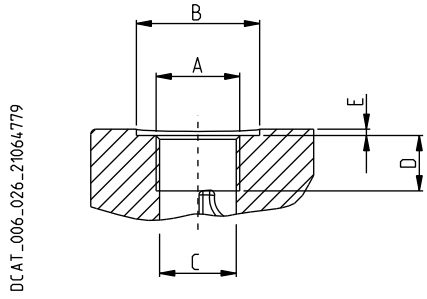

O 02/05.2021

O

CODE	Nominal size	A	Ø B	Ø C	D	E		
		mm (in)	mm (in)	mm (in)	mm (in)	mm (in)	Nm (lbf in)	Nm (lbf in)
GA (X)	1/8”	G 1/8	—	8,75 (0.34)	12 (0.47)	—	—	5 +0,25 (44 ÷ 46)
GD (●)	1/2”	G 1/2	30 (1.18)	19 (0.75)	17 (0.67)	2 (0.08)	20 +1 (177 ÷ 186)	—
GD (◆)			—	19 (0.75)	17 (0.67)	—	—	50 +2,5 (443 ÷ 465)

(X) = Load sensing port - (●) = Drain port - (◆) = KP20 / PHP20 outlet port

PRESSURE COMPENSATOR RPO

Regulates the pump displacement automatically to mantain the pressure below the fixed pre-adjusted limit.

Replaces: 01/01.2013

Compensator type	Pump type	Pressure setting range bar (psi)	Standard setting bar (psi)
RPO	MVPD30-34	80 ÷ 250 (1160 ÷ 3625)	250 (3625)
	MVPD30-45	80 ÷ 280 (1160 ÷ 4060)	280 (4060)
	MVPD48-53	80 ÷ 250 (1160 ÷ 3625)	250 (3625)
	MVPD48-65	80 ÷ 280 (1160 ÷ 4060)	280 (4060)

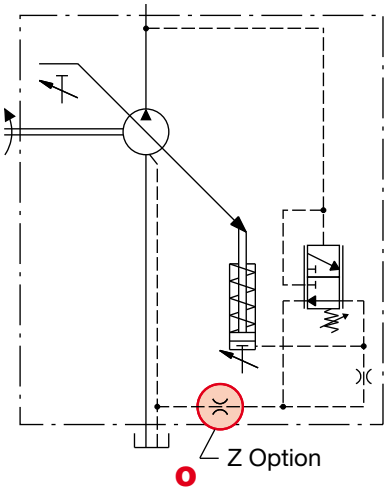

NOTES
Please contact us for more information.

Z OPTION
Damping restrictor for critical applications.
In case of system instability or pressure oscillations, the additional damping restrictor slows down the pump control system, damping the regulation transients. The pump recovery time increases. The use of the damping restrictor must be evaluated and approved by Casappa for the specific application. Please contact us for more information.

OPERATING CURVES
Curves have been obtained at the speed of 1500 min^{-1} and oil temperature 50 °C (122 °F).

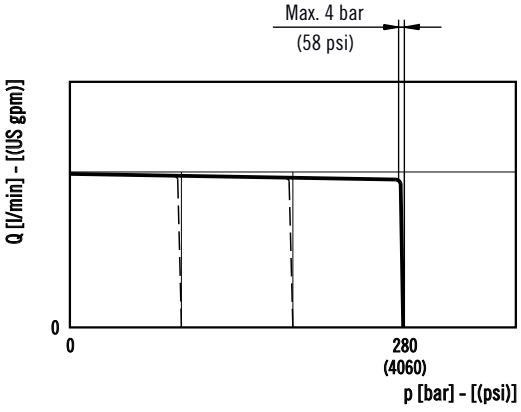

REMOTE CONTROL
For remote pressure compensator LS3 see page 36.

RESPONSE AND RECOVERY TIME
According to SAE J745 (using outlet pressure).

002/05.2021

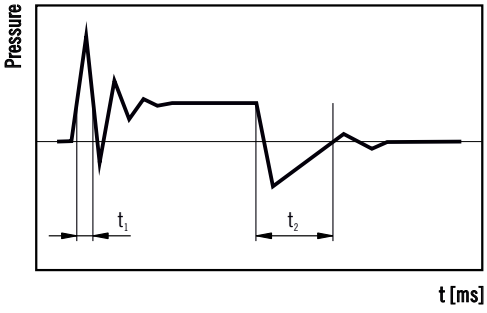

	t_1	t_2
Pump type	Response time [ms] (off stroke)	Recovery time [ms] (on stroke)
MVPD30	46	150
MVPD48	48	150

PRESSURE COMPENSATOR RP1

Regulates the pump displacement automatically to mantain the pressure below the fixed pre-adjusted limit.
Designed to work at high frequency ≥ 2 cycle/min and/or at pressure > 280 bar (4060 psi).

o

NOTES

X: Load-sensing port. Dimensions at page 28 ÷ 30.
Please contact us for more information.

OPERATING CURVES

Curves have been obtained at the speed of 1500 min^{-1} and oil temperature 50 °C (122 °F).

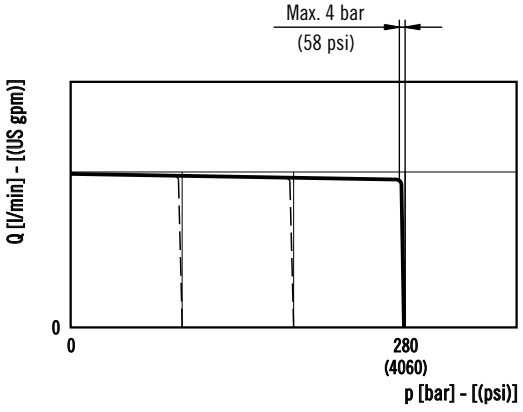

RP1

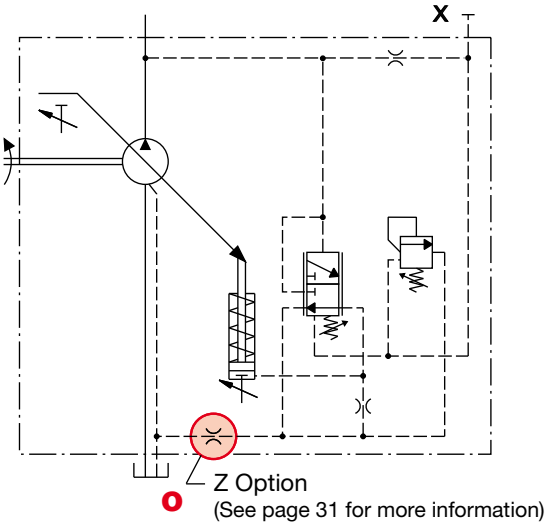

o

RP1 - LS2 (with flow control)

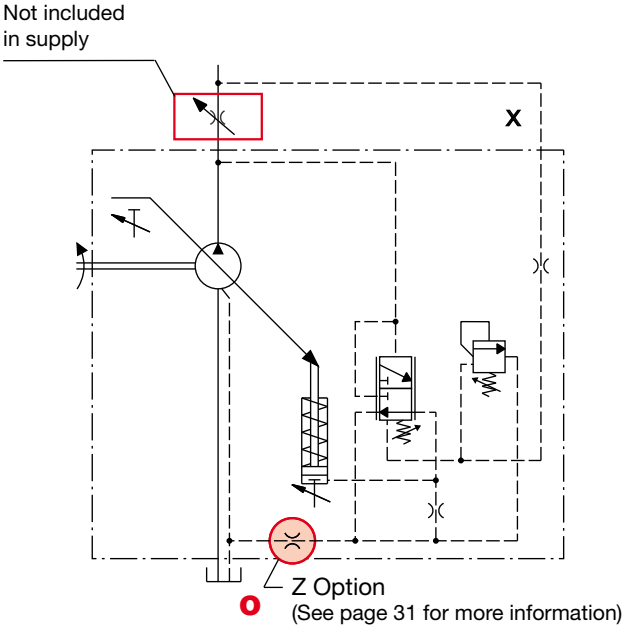

o

Replaces: 01/01.2013

o 02/05.2021

DUAL SETTING PRESSURE COMPENSATOR RP2

Regulates the pump displacement automatically to mantain the pressure below two fixed pre-adjusted limits.
The electrically piloted valve allows to switch between the two different limits.

Replaces: 01/01.2013

NOTES

X: Load-sensing port. Dimensions at page 28 ÷ 30.
Connector: Standard type DIN 43650.
Please contact us for other connectors and more information.

OPERATING CURVES

Curves have been obtained at the speed of 1500 min^{-1} and oil temperature 50 °C (122 °F).

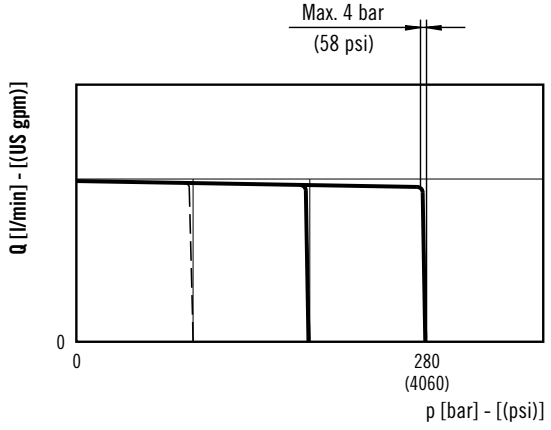

VALVE FEATURES O

Valve code	Arrangement	Voltage
1	Normally closed	12 V DC
2	Normally closed	24 V DC
6	Normally open	12 V DC
7	Normally open	24 V DC

O 02/05.2021

RP2

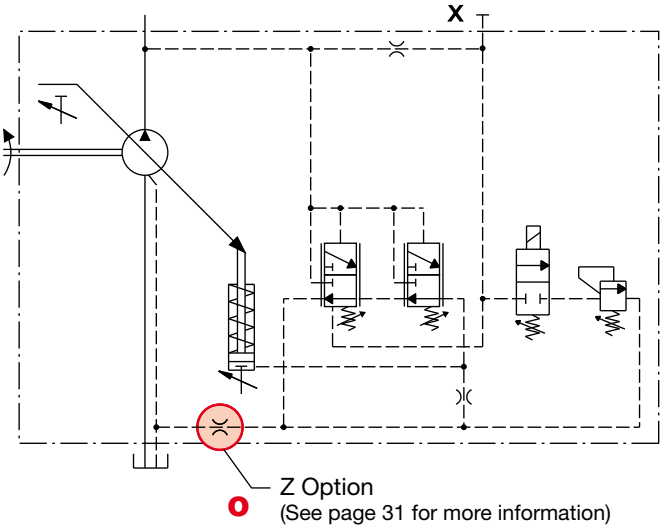

RP2 - LS2 (with flow control)

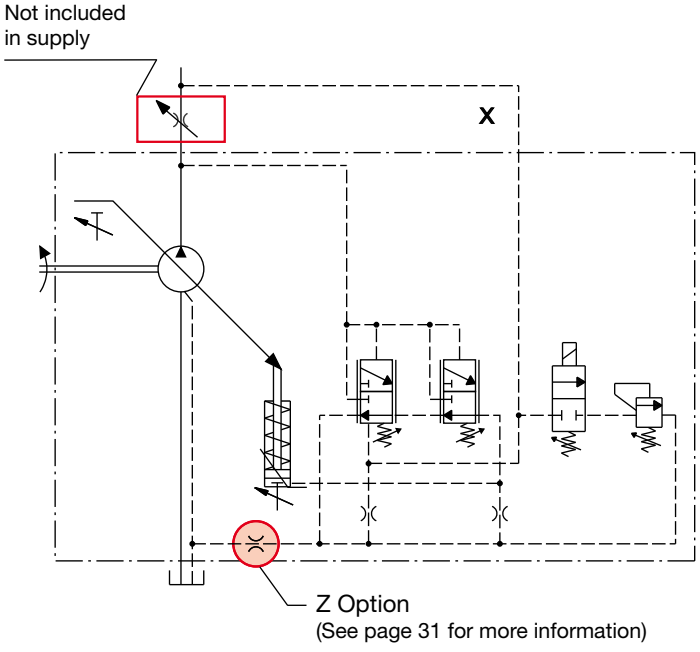

ELECTRO-PROPORTIONAL PRESSURE COMPENSATOR PEC

Regulates the pump displacement automatically to mantain the pressure below the variable limit set through a command current signal.

NOTES

X: Load-sensing port. Dimensions at page 28 ÷ 30.
Please contact us for more information.

OPERATING CURVES

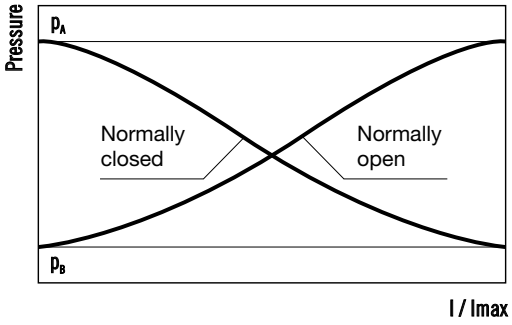

VALVE FEATURES

Valve code	Arrangement	Voltage
1	Normally closed	12 V DC
2	Normally closed	24 V DC
6	Normally open	12 V DC
7	Normally open	24 V DC

o

Connector type	DIN 43650/		DEUTSCH DT04-2P	
Voltage	12 V DC	24 V DC	12 V DC	24 V DC
Power	18 W	19 W	18 W	19 W
Resistance @ 20 °C (68 °F)	8 Ω	30 Ω	8 Ω	30 Ω
Limit current	1500 mA	800 mA	1500 mA	800 mA
Dither frequency	200 Hz			
Operating temperature	-40 ÷ 100 °C (-40 ÷ 212 °F)			

PEC

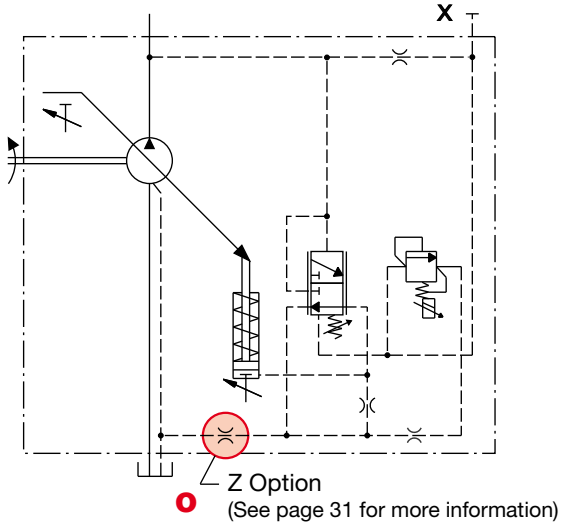

PEC - LS2 (with flow control)

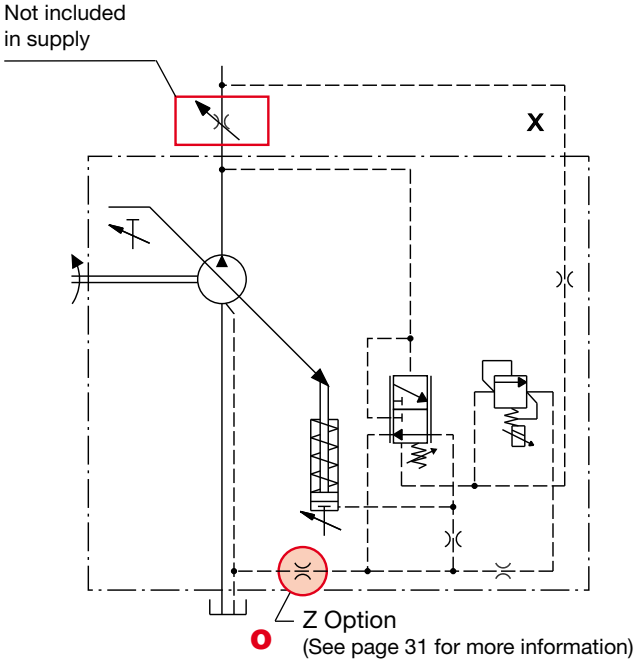

Replaces: 01/01.2013

o 02/05.2021

ELECTRO-PROPORTIONAL PRESSURE COMPENSATOR PLUS ANGULAR SENSOR PECA

Replaces: 01/01.2013

Regulates the pump displacement automatically to mantain the pressure below the variable limit set through a command current signal. The swivel angular sensor converts the actual position of the swashplate into a voltage output signal that can be used for different purposes. This signal and the proportional relief valve allow to realise the following different control logics by means of an external control unit:

- Variable maximum pressure limiter
- Electronic flow compensator with variable setting (variable Load-Sensing)
- Electronic torque limiter with variable torque setting
- Power limiter
- Flow control
- Working e-modes

NOTES

Not available with MVPD30.
X: Load-sensing port. Dimensions at page 28 ÷ 30.
Please contact us for more information.

OPERATING CURVES

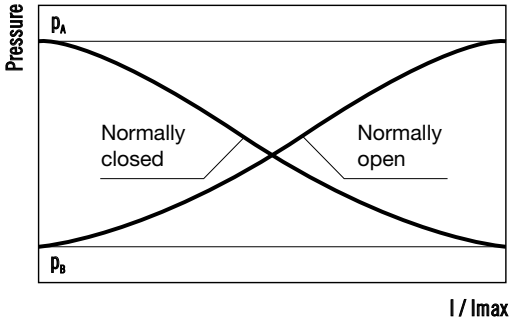

VALVE FEATURES

Valve code	Arrangement	Voltatge
1	Normally closed	12 V DC
2	Normally closed	24 V DC
6	Normally open	12 V DC
7	Normally open	24 V DC

02/05.2021

Connector type	DIN 43650		DEUTSCH DT04-2P	
Voltage	12 V DC	24 V DC	12 V DC	24 V DC
Power W	18 W	19 W	18 W	19 W
Resistance @ 20 °C (68 °F)	8 Ω	30 Ω	8 Ω	30 Ω
Limit current	1500 mA	800 mA	1500 mA	800 mA
Dither frequency	200 Hz			
Operating temperature	-40 ÷ 100 °C (-40 ÷ 212 °F)			
Angular sensor connector type	DEUTSCH DTM04-4P			

PECA

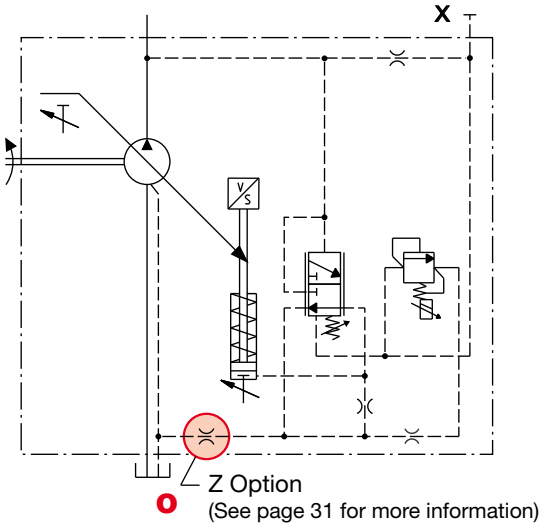

PECA - LS2 (with flow control)

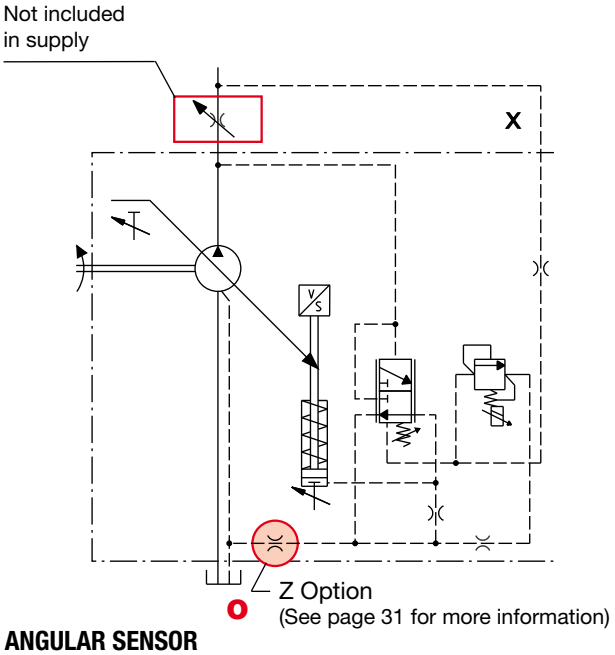

ANGULAR SENSOR

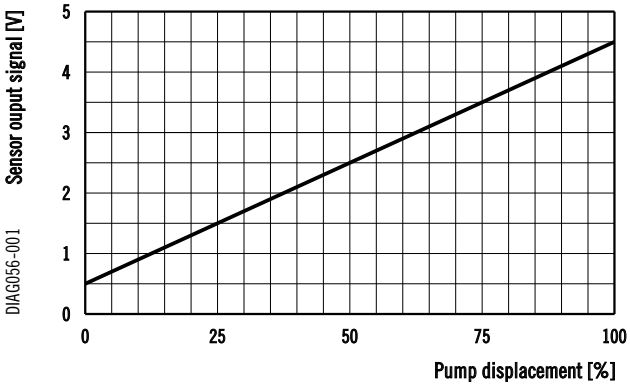

FLOW COMPENSATOR (Load-sensing) LS

Regulates the pump displacement to maintain a constant (load independent) pressure drop across a flow metering device. In the standard version the flow compensator is combined with pressure compensator.

Flow compensator type	Pressure compensator	Differential pressure setting range	Standard setting
		bar (psi)	bar (psi)
LS0 (■)	RPO	12 ÷ 40 (174 ÷ 580)	14 (203)
LS2 (◆)	RPO		
LS3 (●)	RPO		

(■): Suggested when the directional control valve does not have the bleed function
(◆): Y is plugged. Suggested when the directional control valve has the bleed function
(●): For remote pressure control.

Pilot flow ≈ 1,3 ÷ 1,5 l/min (0.34 ÷ 0.40 US gpm)

In standard setting conditions 14 bar (203 psi) the stand-by pressure is $15^{\pm 2}$ bar ($218^{\pm 29}$ psi).

NOTES

X: Load-sensing port. Dimensions at page 28 ÷ 30.
Available without pressure compensator RP.
Please contact us for more information.

OPERATING CURVES

Curves have been obtained at the speed of 1500 min^{-1} and oil temperature 50 °C (122 °F).

Curve at variable speed

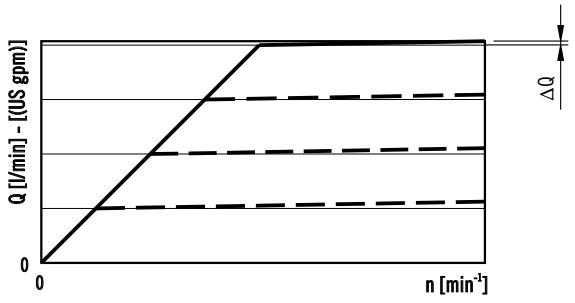

RESPONSE TIME

According to SAE J745 (using outlet pressure).

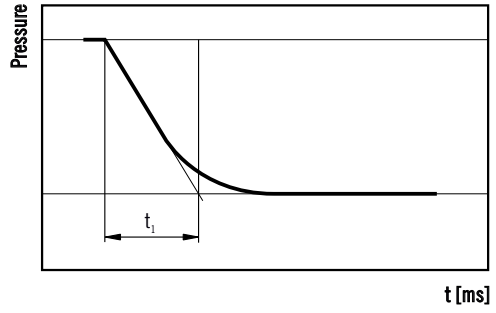

LS0 (Bleed open) **- LS2** (Bleed closed)

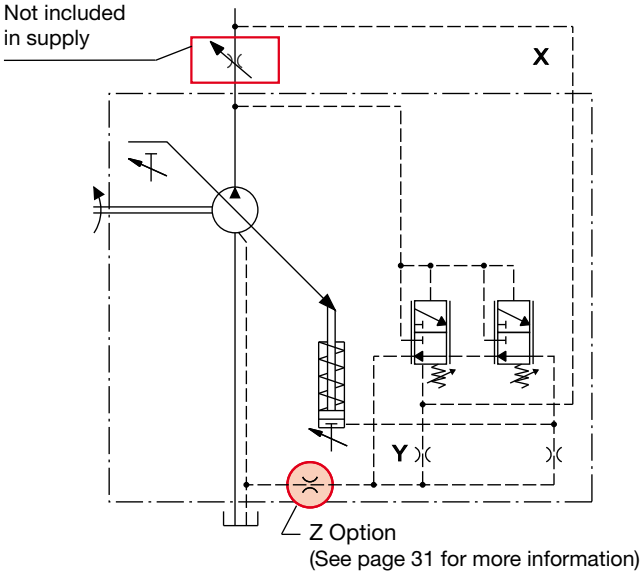

LS3 - Remote pressure compensator

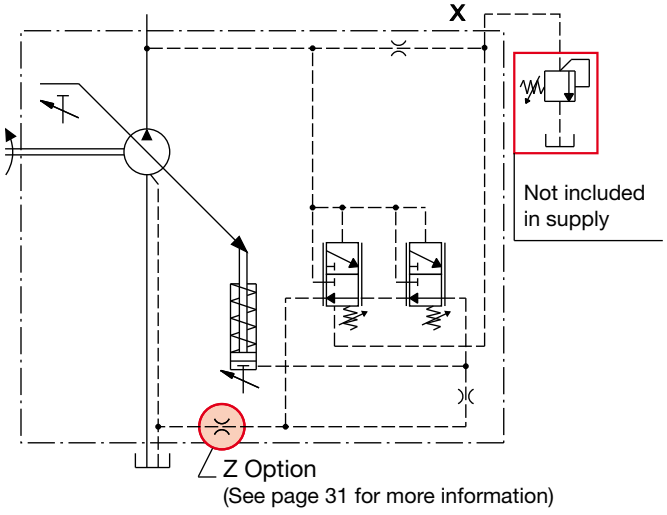

o	ΔQ max
Pump type	l/min (US gpm)
MVPD30	0,9 (0.24)
MVPD48	1,7 (0.45)

o	t_1
Pump type	Response time [ms] (off stroke)
MVPD30	120
MVPD48	120

According to SAE J745 (using outlet pressure)

Replaces: 01/01.2013

o 02/05.2021

TORQUE LIMITER

RN

Regulates the pump displacement according to the system pressure, to maintain the pre-adjusted torque value and protect the prime mover from overload. To have the best torque limiter regulation, the pre-adjusted absorbed torque has to be higher than the value shown in the following table.

Replaces: 01/01.2013

Pump type	Min. torque	Min. power (●)
	Nm (lbf in)	kW (HP)
MVPD30	45 (398)	7.1 (9,5)
MVPD48	61 (540)	9.6 (12,9)

(●) @ 1500 min^{-1}

For lower torque setting values, the regulator limits the maximum working pressure to a value lower than the standard setting for the pressure regulator 280 bar (4060 psi).
When ordering the torque limiter please specify the requested value of torque [eg. 70 Nm (620 lbf in)] or the requested power and speed [eg. 10 kW (13.4 HP) at 1500 min^{-1}].

RN0 - Standard

Torque limitation for closed center valve.

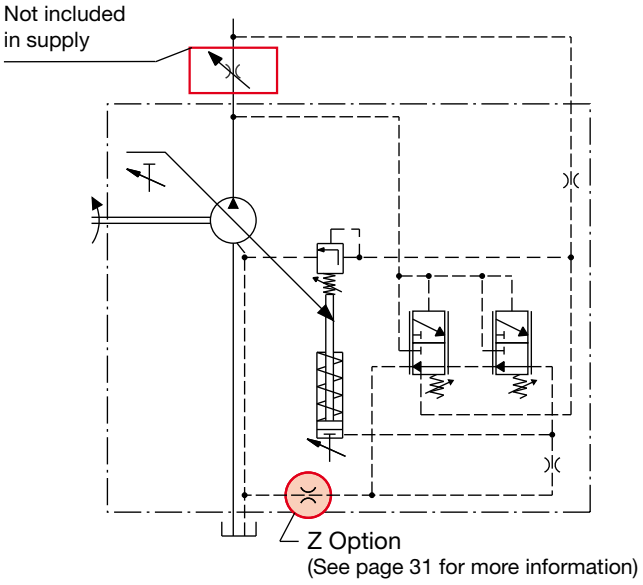

RN1 - Internal pilot

Torque limitation for open center valve.

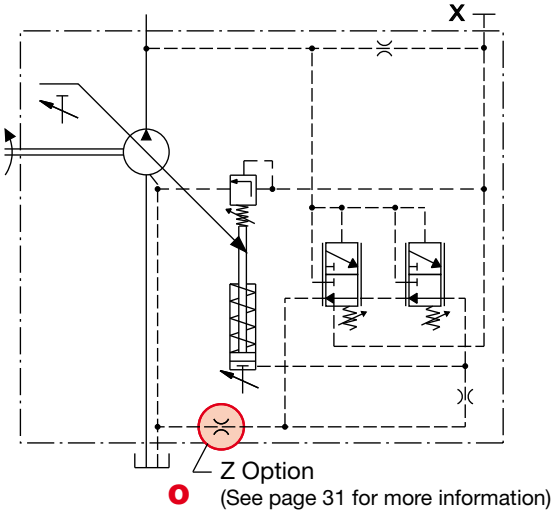

NOTES
X: Load-sensing port. Dimensions at page 28 ÷ 30.
Available without pressure compensator RP.
Please contact us for more information.

OPERATING CURVES

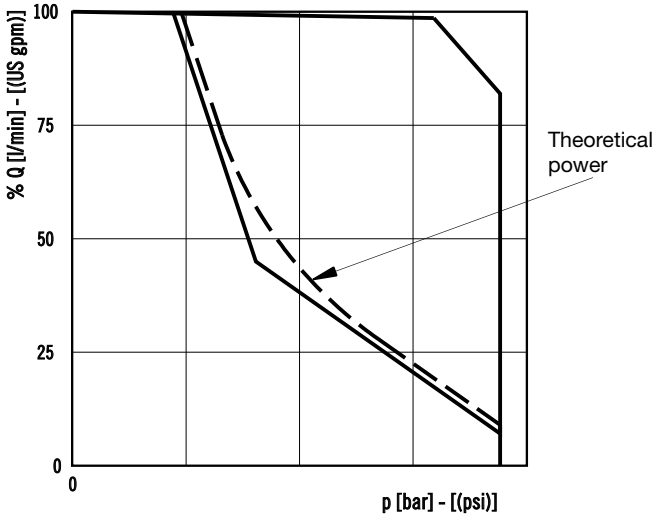

02/05.2021

DUAL SETTING TORQUE LIMITER RN2

Regulates the pump displacement automatically to mantain the torque below two fixed pre-adjusted limits.
The electrically piloted valve allows to switch between the two different limits.

RN2-LS0 / RN2-LS2

For LS2 configuration Y is plugged.

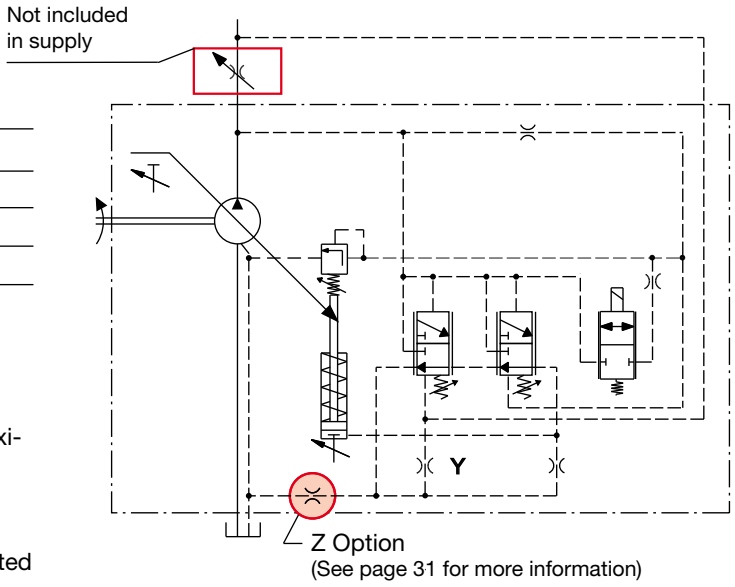

Pump type	Min. torque	Min. power (●)
	Nm (lbf in)	kW (HP)
MVPD30	45 (398)	7.1 (9,5)
MVPD48	61 (540)	9.6 (12,9)

(●) @ 1500 min^{-1}

For lower torque setting values, the regulator limits the maximum working pressure to a value lower than the standard setting for the pressure regulator 280 bar (4060 psi).

When ordering the torque limiter please specify the requested value of torque [eg. 70 Nm (620 lbf in)] or the requested power and speed [eg. 10 kW (13.4 HP) at 1500 min^{-1}].

NOTES

X: Load-sensing port. Dimensions at page 28 ÷ 30.
Please contact us for more information.

OPERATING CURVES

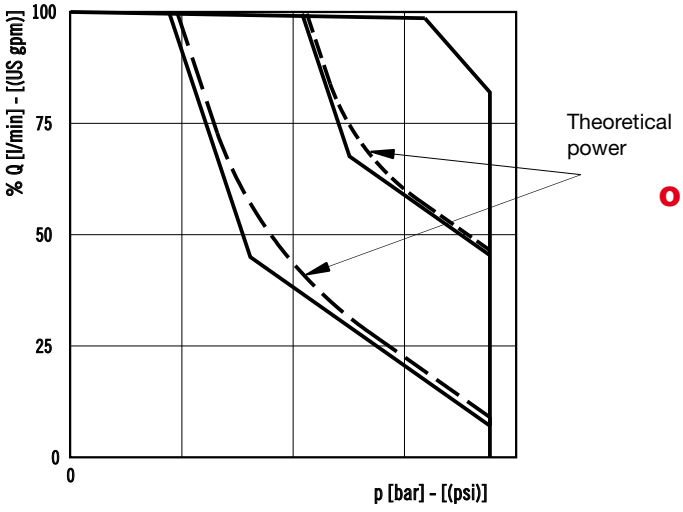

VALVE FEATURES

Valve code	Arrangement	Voltage
1	Normally closed	12 V DC
2	Normally closed	24 V DC
6	Normally open	12 V DC
7	Normally open	24 V DC

Connector type	DIN 43650 DEUTSCH DT04-2P

Replaces: 01/01.2013

02/05.2021

HIGH PERFORMANCE TORQUE LIMITER RN3

Regulates the pump displacement according to the system pressure, to maintain the pre-adjusted torque value and protect the prime mover from overload.
This version is optimized for LS systems. With the standard torque limiter RN0, in case of a high flow through the LS main valve the torque absorbed by the pump can be slightly lower than the pre-adjusted torque value, resulting in a lower flow.
The RN3 version grants the pre-adjusted torque value even at high flow through the LS main valve.
To have the best torque limiter regulation, the pre-adjusted absorbed torque has to be higher than the value shown in the following table.

Pump type	Min. torque	Min. power (●)
	Nm (lbf in)	kW (HP)
MVPD30	45 (398)	7.1 (9,5)
MVPD48	61 (540)	9.6 (12,9)

(●) @ 1500 min^{-1}

For lower torque setting values, the regulator limits the maximum working pressure to a value lower than the standard setting for the pressure regulator 280 bar (4060 psi).
When ordering the torque limiter please specify the requested value of torque [eg. 70 Nm (620 lbf in)] or the requested power and speed [eg. 10 kW (13.4 HP) at 1500 min^{-1}].

RN3 - Special version

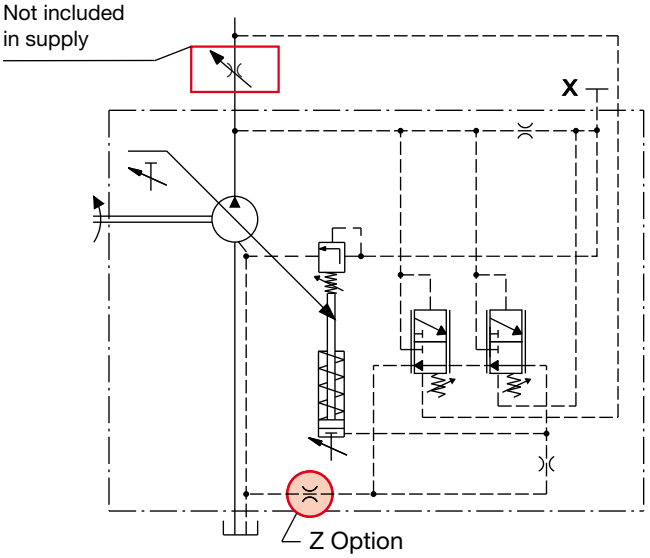

(See page 31 for more information)

NOTES

X: Load-sensing port. Dimensions at page 28 ÷ 30.
Available with or without pressure compensator RP.
Please contact us for more information.

OPERATING CURVES

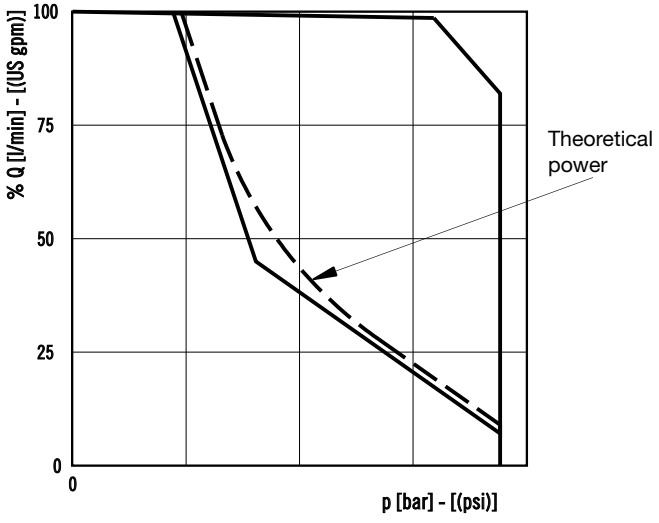

02/05.2021

UNLOADING VALVE

U ..

NC (normally closed)

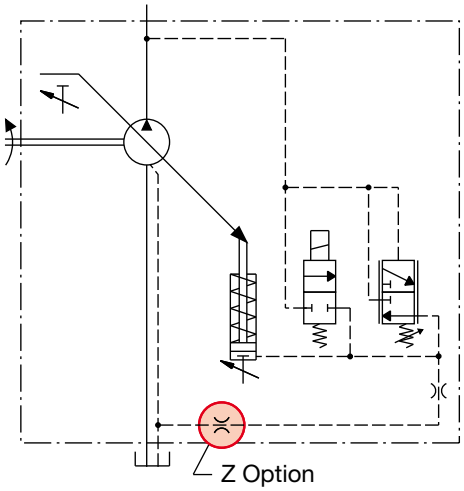

With the valve NC type (normally closed), energizing the olenoid valve the displacement is reset and the pump is unloaded.

NA (normally open)

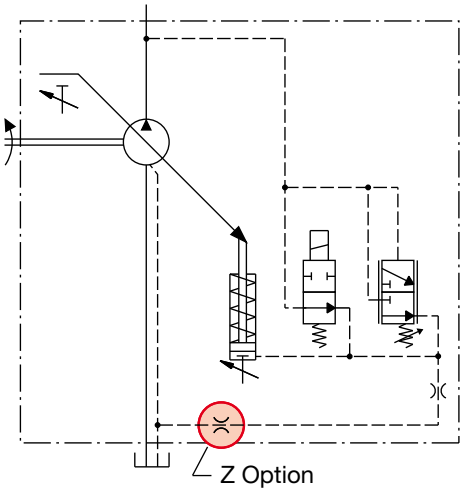

With the valve NA type (normally open), energizing the solenoid valve the pump works at the maximum displacement.

NOTES
Available without pressure compensator RP.
Connector type: DIN 43650.
Please contact us for other connectors and more information.

VALVE FEATURES O

Valve code	Arrangement	Voltage
U1	Normally closed	12 V DC
U2	Normally closed	24 V DC
U6	Normally open	12 V DC
U7	Normally open	24 V DC

Replaces: 01/01.2013
O 02/05.2021

ELECTRO-PROPORTIONAL DISPLACEMENT COMPENSATOR DEC

Regulates the pump displacement automatically to maintain it below the variable limit set through a command current signal.

OPERATING CURVES

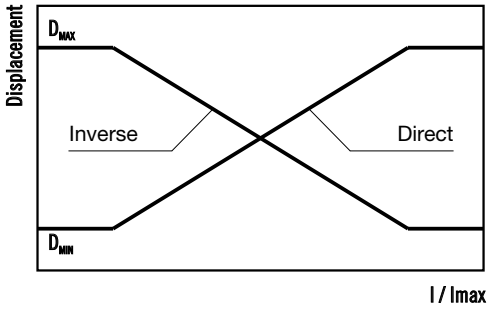

DEC

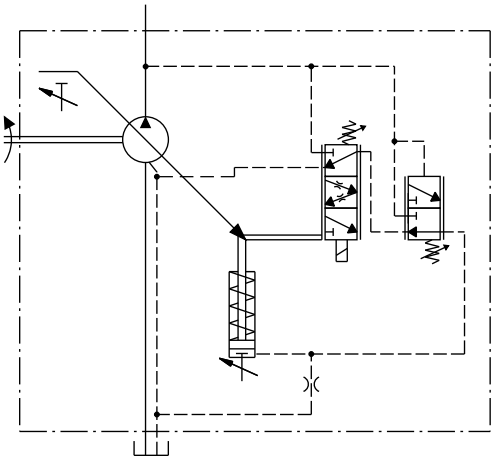

VALVE FEATURES

Valve code	Arrangement	Voltage
1	Inverse	12 V DC
2	Inverse	24 V DC
6	Direct	12 V DC
7	Direct	24 V DC

Connector type	DIN 43 650		DEUTSCH DT04-2P	
Voltage	12 V DC	24 V DC	12 V DC	24 V DC
Power	33 W		33 W	
Resistance @ 20 °C (68 °F)	4,4 Ω	17,4 Ω	4,3 Ω	17,5 Ω
Limit current	1700 mA	850 mA	1700 mA	850 mA
Dither frequency	150 Hz		150 Hz	
Operating temperature	-40 ÷ 100 °C (-40 ÷ 212 °F)		-40 ÷ 100 °C (-40 ÷ 212 °F)	

02/05.2021

NOTES

02/05.2021

MULTIPLE PUMPS WITH THROUGH DRIVE

Replaces: 01/01.2013

THROUGH DRIVE

MVPD through drive axial piston pumps offer the flexibility to obtain different groups able to supply several hydraulic systems. The operating characteristics of each assembled pumps are the same as the corresponding single pumps according to the following conditions:
1) Do not exceed the maximum transmissible torque.
2) The maximum rotational speed is that of the lowest rated speed of the single unit incorporated.

M	Nm (lbf in)	Torque
V	cm^3/rev (in^3/rev)	Displacement
Δp	bar (psi)	Pressure
$\eta_{hm} = \eta_{hm}$ (V, Δp, n)		Hydro-mechanical efficiency

$$M = \frac{\Delta p\ (bar) \bullet V\ (cm^3/rev)}{62{,}83 \bullet \eta_{hm}} \quad [Nm]$$

Notes: The torque absorbed from the shaft of the first pump results from the sum of the torques due to all the single stages. The achieved value must not exceed the maximum torque limit given for the shaft of the first pump.

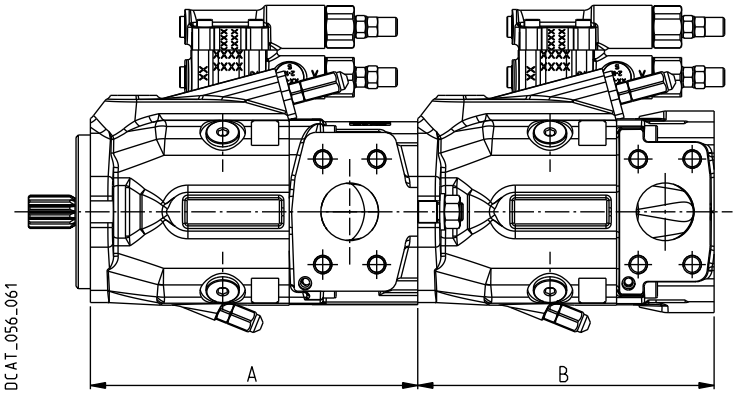

A: Front section (through drive)
B: MVPD Rear pump (the same of single pump with side or rear ports)
Gear rear pump are also available, please see the respective technical catalogues.

O 02/05.2021

A		
Pump type	Flanged for	Code
MVPD30	SAE A	**AS1**
	SAE B	**AS5**

MVPD30 FRONT SECTION DIMENSIONS AS1

Through drive SAE A

Drive shafts: see pages 25
Mounting flanges: see pages 27
Ports: see pages 28 ÷ 30

The drawing shows a front section with clockwise rotation

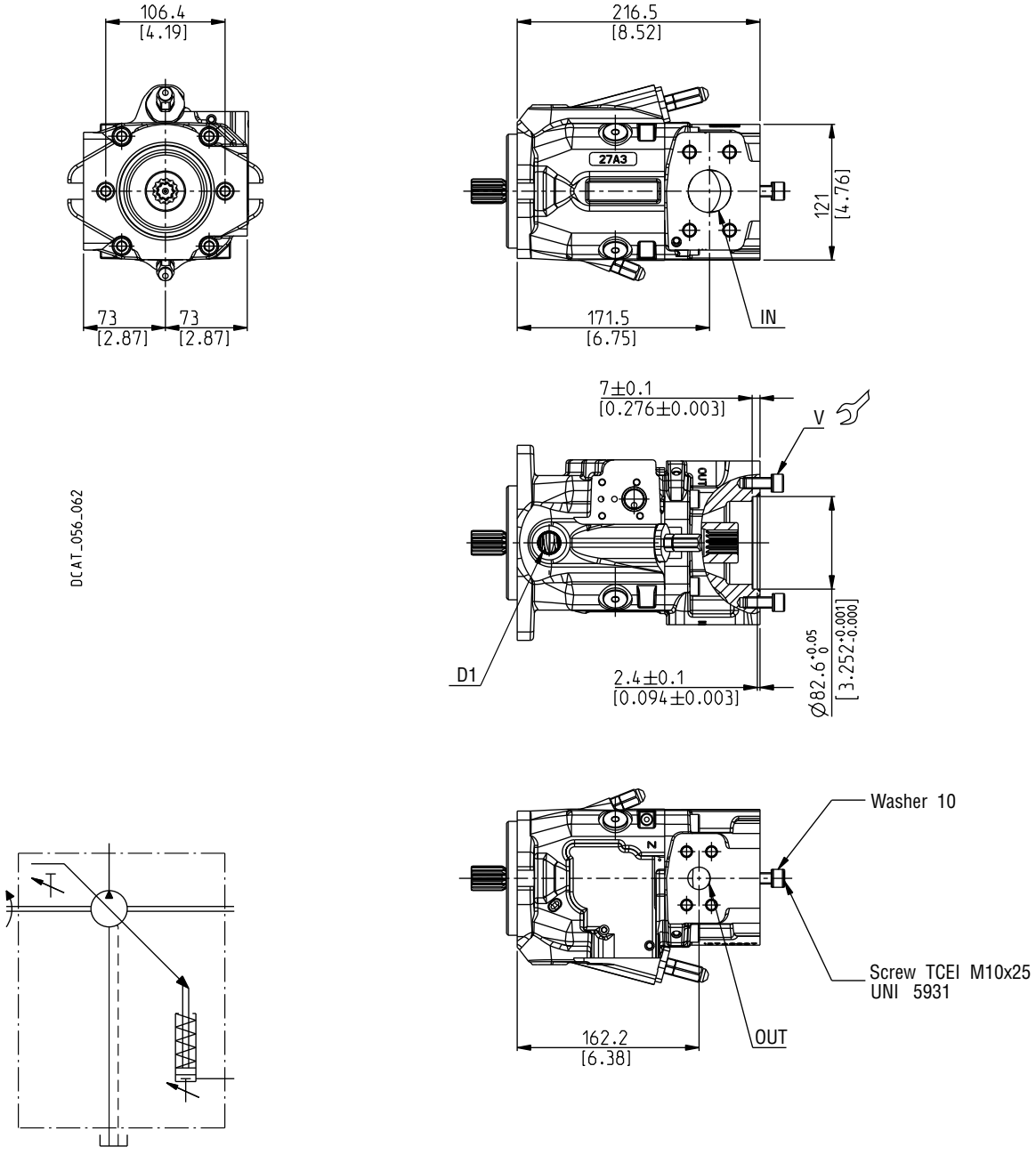

02/05.2021

Screws tightening torque Nm (lbf in)
V
70 ±7 (558 ÷ 682)

MVPD30 COUPLINGS - DIMENSIONS

SAE “A” SPLINE 03

Available with flange code **AS1**

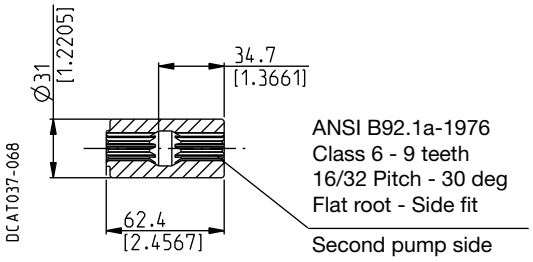

MAX 100 Nm (885 lbf in)

SAE “A” STRAIGHT 31

Available with flange code **AS1**

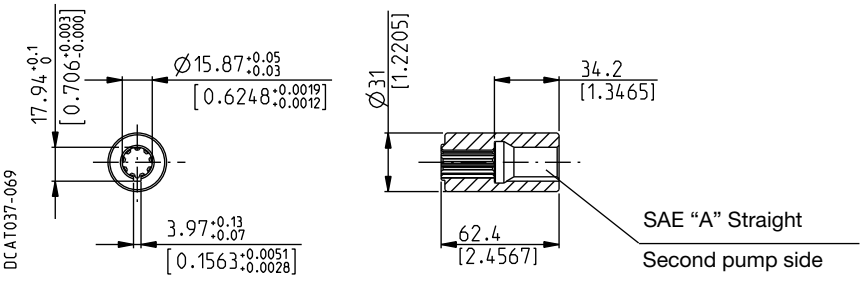

MAX 70 Nm (620 lbf in)

02/05.2021

MVPD30 FRONT SECTION DIMENSIONS AS5

Through drive SAE B

Drive shafts: see pages 25
Mounting flanges: see pages 27
Ports: see pages 28 ÷ 30

The drawing shows a front section with clockwise rotation

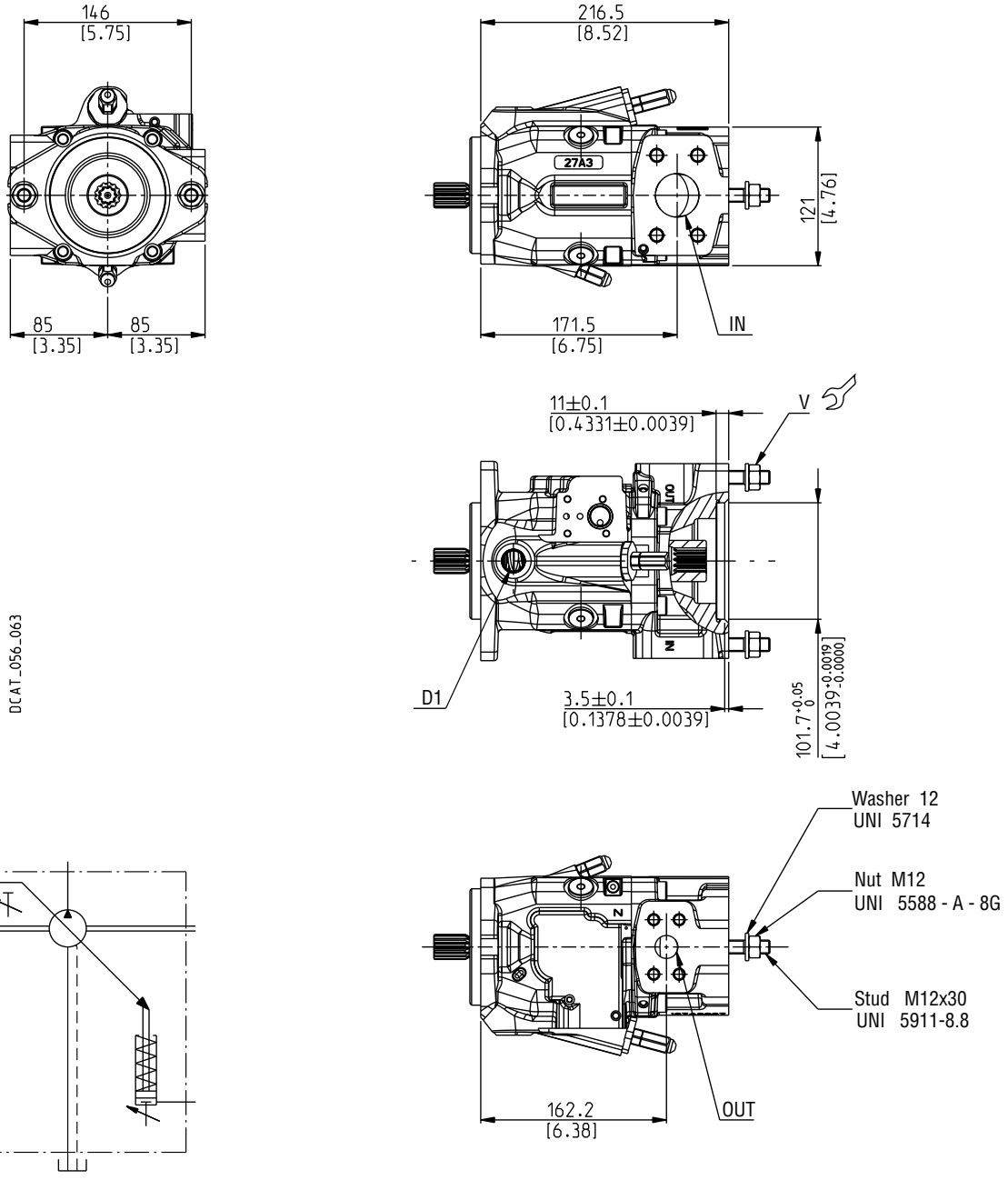

02/05.2021

Nuts tightening torque Nm (lbf in)

V
100 ±10 (797 ÷ 974)

MVPD30 COUPLINGS - DIMENSIONS

SAE “B” SPLINE 04

Available with flange code **AS5**

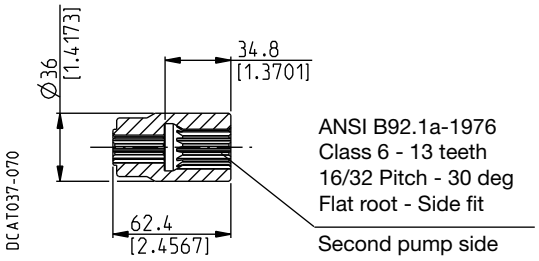

MAX 100 Nm (885 lbf in)

SAE “B” STRAIGHT 32

Available with flange code **AS5**

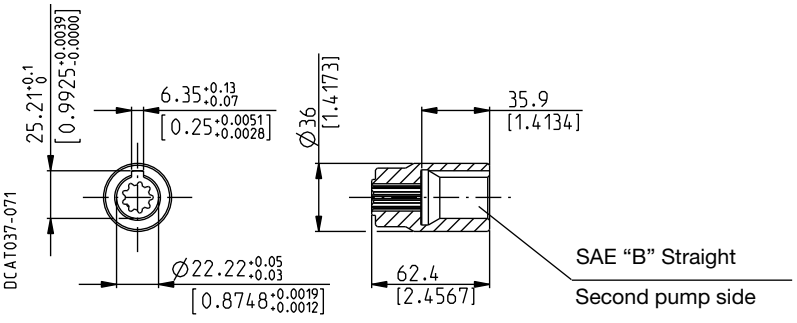

MAX 100 Nm (885 lbf in)

02/05.2021

MVPD30 FRONT SECTION KIT COVER

Kit cover is available to obtain single pumps starting from the front sections of multiple pumps.
Before closing the intermediate flange check that the coupling has been removed.

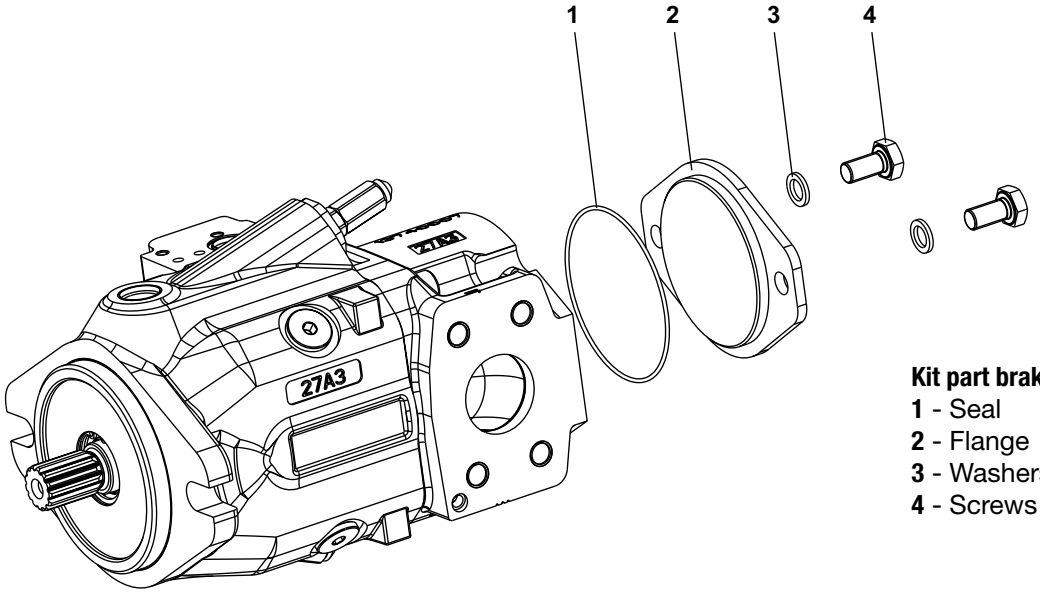

Kit part brake down
1 - Seal
2 - Flange
3 - Washers
4 - Screws

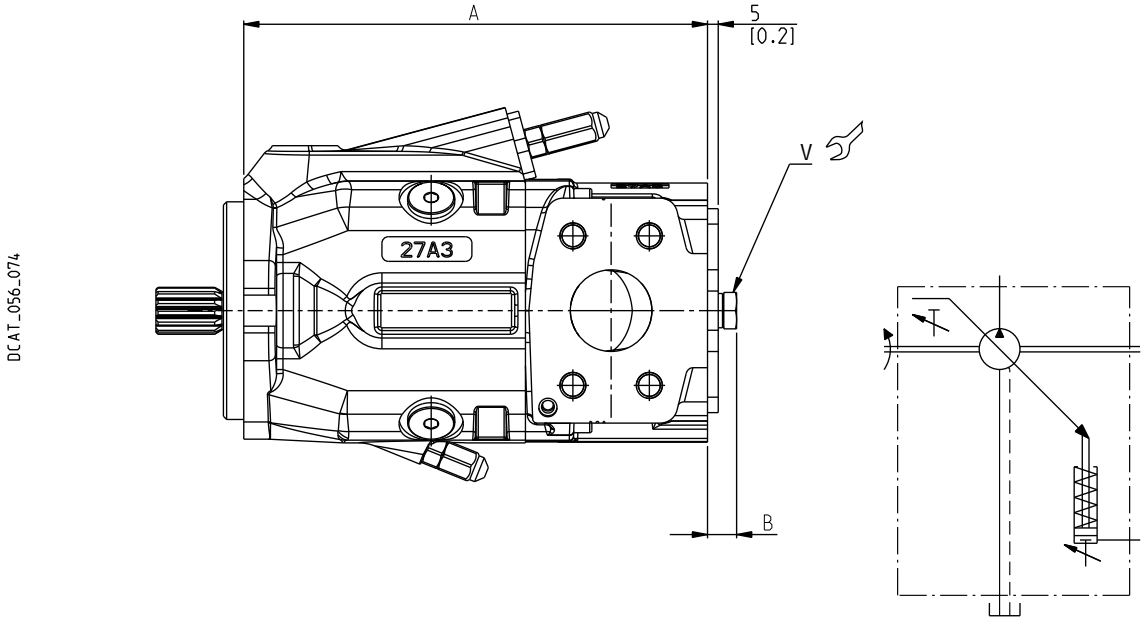

02/05.2021

Front section					Kit cover code	
Pump type	Flanged for	Code	**A**	**B**	Seals	
			mm (in)	mm (in)	N (Buna)	V (Viton)
MVPD30	SAE A	AS1	209 (8.2283)	14 (0.5512)	**62100006**	**6210000F**
	SAE B	AS5	209 (8.2283	16 (0.6299)	**62100007**	**6210000A**

Screws tightening torque Nm (lbf in)
V
20 ±1 (159 ÷ 195)

NOTES

02/05.2021

HOW TO ORDER SINGLE PUMPS

1	2		3	4		5	6		7		8 ...
MVPD30·34	S	-	04	S5	-	L	ME/MB	-	N	-	...

1 Pump type (max. displacement)	O	Code
34 cm³/rev (2.07 in³/rev)		MVPD30·34
45 cm³/rev (2.75 in³/rev)		MVPD30·45
53 cm³/rev (3.23 in³/rev)		MVPD48·53
65 cm³/rev (3.97 in³/rev)		MVPD48·65

2 Rotation	Code
Anti-clockwise	S
Clockwise	D

3 Drive shaft (a)	O	Code
SAE “A” spline (9 teeth)		03
SAE spline (11 teeth)		07
SAE “B” spline (13 teeth)		04
SAE “B” spline (13 teeth)		4R
SAE “B” straight		32
SAE “BB” spline (15 teeth)		05
SAE “BB” spline (15 teeth)		5R

4 Mounting flange (a)	O	Code
SAE “A” 2 holes		S1
SAE “B” 2 holes		S5

5 Ports position	Code
Side	L
Rear	P

Code	O	6 Inlet/outlet ports		
		Nominal size		Pump type
		Inlet IN	Outlet OUT	
		SAE 3000	SAE 3000	
SAE FLANGED PORTS METRIC THREAD (SSM)				
ME/MB		1” 1/4	3/4”	MVPD30
ME/MC		1” 1/2	1”	MVPD48
SAE FLANGED PORTS UNC THREAD (SSS)				
SE/SB		1” 1/4	3/4”	MVPD30
SE/SC		1” 1/2	1”	MVPD48

Code	7 Seals
N	Buna (standard)
V	Viton

Code	8 Regulators
...	See how to order on page 51 ÷ 53

(a) Drive shafts availability at pages 25 ÷ 26 and mounting flanges availability at pages 27

Replaces: 01/01.2013

O 02/05.2021

HOW TO ORDER REGULATORS

PRESSURE COMPENSATORS - FLOW COMPENSATORS (Load-sensing)

		8		9		10		11		12		13
Pressure compensator	O	RP0	-					Z	-			G
Pressure compensator	O	RP1	-					Z	-			G
Pressure compensator with flow control	O	RP1	-			LS2	-	Z	-			G
Dual setting pressure compensator	O	RP2	-	1	-			Z	-	S	-	G
Dual setting pressure compensator with flow control		RP2	-	1	-	LS2	-	Z	-	S	-	G
Flow compensator		LS0	-					Z	-			G
Flow compensator for remote control		LS2	-					Z	-			G
Pressure compensator for remote control		LS3	-					Z	-			G

8 Regulators type	Code
Pressure compensator	RP0
Pressure compensator	RP1
Dual setting pressure compensator	RP2
Flow compensator	LS0
Flow compensator for remote control	LS2
Pressure compensator for remote control	LS3

9 Valve type O	Code
Normally closed 12 V DC	1
Normally closed 24 V DC	2
Normally open 12 V DC	6
Normally open 24 V DC	7

Code	Flow control option 10
LS2	Flow compensator

Code	Restrictor option 11
	Without restrictor (standard - no code)
Z	Damping restrictor (only for critical applications)

Code	Connector type 12
S	DIN 43650 (standard)
D	Deutsch DT04-2P

Code	O Displacement limiter 13
E	Max. displacement limiter
G	Min. and Max. displacement limiter

ORDER EXAMPLE
MVPD30 pump with dual setting pressure compensator:
MVPD30.34S-04S5-LME/MB-N-RP2-1-S-G

Replaces: 01/01.2013
O 02/05.2021

HOW TO ORDER REGULATORS

ELECTRO-PROPORTIONAL PRESSURE AND DISPLACEMENT COMPENSATORS - UNLOADING VALVES

		8		9		10		11		12		13		14		15		16
Electro-proportional pressure compensator	O	PEC	-	1	-	A	-			Z		...	/	...	-	D	-	G
Electro-proportional pressure compensator with flow control	O	PEC	-	1	-	A	-	LS2	-	Z		...	/	...	-	D	-	G
Electro-proportional pressure compens. plus angular sensor	O	PECA	-	1	-	A	-			Z		...		...		D		G
Electro-proportional pressure compens. plus angular sensor with flow control	O	PECA	-	1	-	A	-	LS2	-	Z		...		...	-	D	-	G
Unloading valve		U..	-							Z	-							G
Electro-proportional displacement compensator	O	DEC	-	1	-			LS2	-							D	-	G

Replaces: 01/01.2013

8	Regulators type (a)	Code
	Electro-proportional pressure compensator	PEC
	Electro-proportional pressure compensator and swashplate angular sensor (a)	PECA
	Unloading valve - Normally closed 12 V DC	U1
	Unloading valve - Normally closed 24 V DC	U2
	Unloading valve - Normally open 12 V DC	U6
	Unloading valve - Normally open 24 V DC	U7
	Electro-proportional displacement compensator	DEC

9	Valve type	Code
	Normally closed 12 V DC	1
	Normally closed 24 V DC	2
	Normally open 12 V DC	6
	Normally open 24 V DC	7

10	Position	Code
	Position 0°	A
	Position 90°	B

Code	Flow control option	11
LS2	Flow compensator for remote control	

Code	Restrictor option	12
	Without restrictor (standard - no code)	
Z	Damping restrictor (only for critical applications)	

Code	Min. pressure setting	13
...	Please specify the requested value in bar	

Code	Max. pressure setting	14
...	Please specify the requested value in bar	

Code	Connector type	15
S	DIN 43650	
D	Deutsch DT04-2P	

Code	O Displacement limiter	16
E	Max. displacement limiter	
G	Min. and Max. displacement limiter	

O 02/05.2021

(a) PECA: not available with MVPD30

ORDER EXAMPLE

MVPD48 pump with electro-proportional pressure compensator with flow control:

MVPD48.53S-04S5-LME/MC-N-PEC-1-A-LS2-100/230-D-G

HOW TO ORDER REGULATORS

TORQUE LIMITERS

		8		9		10		11		12		13		14		15		16
Torque limiter - standard		RN0	-							Z	-	G	-	...	/			...
Torque limiter - internal pilot	O	RN1	-							Z	-	G	-	...	/			...
Dual setting torque limiter with flow control		RN2	-	1	-	S	-	LS0	-	Z	-	G	-	...	/	...	/	...
Dual setting torque limiter with remote flow control		RN2	-	1	-	S	-	LS2	-	Z	-	G	-	...	/	...	/	...
High performance torque limiter	O	RN3	-							Z	-	G	-	...	/			...

8	Regulators type	Code
	Torque limiter - standard	RN0
	Torque limiter - internal pilot	RN1
	Dual setting torque limiter with flow control	RN2
	High performance torque limiter	RN3

9	Valve type	Code
	Normally closed 12 V DC	1
	Normally closed 24 V DC	2
	Normally open 12 V DC	6
	Normally open 24 V DC	7

10	Connector type	Code
	DIN 43650 (standard)	S
	Deutsch DT04-2P	D

Code	Flow control option	11
LS0	Flow compensator	
LS2	Flow compensator for remote control	

Code	Restrictor option	12
	Without restrictor (standard - no code)	
Z	Damping restrictor (only for critical applications)	

Code	O Displacement limiter	13
E	Max. displacement limiter	
G	Min. and Max. displacement limiter	

Code	Torque limiter setting (a)	14
...	Please specify the requested torque value in Nm	

Code	Second torque limiter setting (a)	15
...	Please specify the requested torque value in Nm	

Code	Torque limiter setting speed (b)	16
...	Please specify the requested speed value	

(a) Refer to page 37 ÷ 39 for more information

(b) Do not exceed the maximum speed shown on page 7 ÷ 9

ORDER EXAMPLE

MVPD30 pump with dual setting torque limiter with flow control:

MVPD30.34S-04S5-LME/MB-N-RN2-1-S-LS0-Z-G-150/200/2100

Replaces: 01/01.2013

O 02/05.2021

HOW TO ORDER MULTIPLE PUMPS - PISTON PUMP/GEAR PUMP

Common inlet

1	2	3	4	5	6	7	8 ...	9	10	7	11	12	13	14
MVPD30-34	S	- 04	S5	- L	ME/MB	- N	- ...	- G	- P7	-	A	(#	/ #	/ #) /

Front section

KP20-6,3	S	-	-	L	**/GD	-	N5	-	N	-	P	

Rear section

1 Pump type (max. displacement) O	Code
Front section - The same of single pumps	MVPD ...
Rear section - KAPPA 20 gear pumps (a)	KP 20 ...
Rear section - POLARIS PH gear pumps (b)	PHP 20 ...

2 Rotation	Code
Anti-clockwise	S
Clockwise	D

3 Drive shaft (c) O	Code
SAE “A” spline (9 teeth)	03
SAE spline (11 teeth)	07
SAE “B” spline (13 teeth)	04
SAE “B” spline (13 teeth)	4R
SAE “B” straight	32
SAE “BB” spline (15 teeth)	05
SAE “BB” spline (15 teeth)	5R

4 Mounting flange (c) O	Code
SAE “A” 2 holes	S1
SAE “B” 2 holes	S7

5 Ports position	Code
Side	L

6 Inlet/outlet ports (a) - (b) O			Code
Pump type	Nominal size Inlet IN	Nominal size Outlet OUT	
	SAE 3000	SAE 6000	
SAE FLANGED PORTS METRIC THREAD (SSM)			
MVPD30	1” 1/4	3/4”	ME/MB
MVPD48	1” 1/2	1”	ME/MC

Code O	6 Inlet/outlet ports		
	Nominal size Inlet IN	Nominal size Outlet OUT	Pump type
	SAE 3000	SAE 3000	
SAE FLANGED PORTS UNC THREAD (SSS)			
SE/SB	1” 1/4	3/4”	MVPD30
SE/SC	1” 1/2	1”	MVPD48

Code	7 Seals
N	Buna (standard)
V	Viton

Code	8 Regulators
...	See how to order on page 51 ÷ 53

Code O	9 Displacement limiter
E	Max. displacement limiter
G	Min. and Max. displacement limiter

Code	10 Intermediate flange
FRONT SECTION	
P7	Flanged for KP20
I7	Flanged for PHP20
REAR SECTION	
N5	Kappa 20 (common inlet)
S7	Polaris PHP 20 (common inlet)

Code	11 Sections
A	Front
P	Rear

Replaces: 01/01.2013

O 02/05.2021

HOW TO ORDER MULTIPLE PUMPS - PISTON PUMP/GEAR PUMP

Replaces: 01/01.2013

Code	Torque limiter setting (#)	12
...	Please specify the requested torque value in Nm	

Code	Second torque limiter setting (#)	13
...	Please specify the requested torque value in Nm	

Code	Torque limiter setting speed (#)	14
...	Please specify the requested speed value	

o

Omit code only if ordering assembled multiple pumps

(#) Only for torque limiter. Refer to page 53 for more information. Write these codes at the end only if ordering assembled multiple pumps

(a) KAPPA 20 gear pumps: displacements on page 19 and 23. For more information, please see the respective technical catalogue

(b) POLARIS PH gear pumps displacements on page 20 and 24. For more information, please see the respective technical catalogue

(c) Drive shafts availability at pages 25 ÷ 26 and mounting flanges availability at pages 27

ORDER EXAMPLE

Common inlet double pump MVPD30 with RN1 torque limiter-internal pilot + PHP20 gear pump.

INDIVIDUAL SECTIONS

Front section **MVPD30.34S-04S5-LME/MB-N-RN1-G-I7-A (100/2500)**

Rear section **PHP20.23S-L **/GD-S7-N-P**

ASSEMBLED DOUBLE PUMP

MVPD30.34S-04S5-LME/MB-N-RN1-G/PHP20.23-L/GD (100/2500)**

o 02/05.2021

MVPD30 HOW TO ORDER MULTIPLE PUMPS - PISTON PUMP/PISTON PUMP

Through drive

1	2	3	4	5	6	7	8 ...	9	10	11	12	13	14
MVPD30·34	S	- 04	S5	- L	ME/MB	- N	- ...	- G	- AS5	- 04	- (#	/ #	/ #) /

Front section (through drive)

MVPD30·34	S	- 04	S5	- L	ME/MB	- N	- ...	- G	-	-	- ...	/ ...	/ ...

Rear section (single pump)

1 Pump type (max. displacement) (a)	Code
Front section MVPD30 (the same of single pumps)	MVPD30 ...
Rear section MVPD30 (the same of single pumps)	MVPD30 ...

2 Rotation	Code
Anti-clockwise	S
Clockwise	D

3 Drive shaft (b)	Code
SAE “A” spline (9 teeth)	03
SAE spline (11 teeth)	07
SAE “B” spline (13 teeth)	04
SAE “B” spline (13 teeth)	4R
SAE “B” straight	32

4 Mounting flange (b)	Code
SAE “A” 2 holes	S1
SAE “B” 2 holes	S5

5 Ports position	Code
Side	L

6 Inlet/outlet ports			Code
Pump type	Nominal size		
	Inlet IN	Outlet OUT	
	SAE 3000	SAE 6000	
SAE FLANGED PORTS METRIC THREAD (SSM)			
MVPD30	1” 1/4	3/4”	ME/MB
SAE FLANGED PORTS UNC THREAD (SSS)			
MVPD30	1” 1/4	3/4”	SD/SB

Code	Seals 7
N	Buna (standard)
V	Viton

Code	Regulators 8
...	See how to order on page 51 ÷ 53

Code	Displacement limiter 9
E	Max. displacement limiter
G	Min. and Max. displacement limiter

Code	Intermediate flange (c) 10
AS1	SAE “A” 2 holes
AS5	SAE “B” 2 holes

Code	Coupling (d) 11
03	SAE “A” spline (9 teeth)
31	SAE “A” straight
04	SAE “B” spline (13 teeth)
32	SAE “B” straight

Code	Torque limiter setting (#) 12
...	Please specify the requested torque value in Nm

02/05.2021

MVPD30 HOW TO ORDER MULTIPLE PUMPS - PISTON PUMP/PISTON PUMP

Code	Second torque limiter setting (#)	13
...	Please specify the requested torque value in Nm	

Code	Torque limiter setting speed (#)	14
...	Please specify the requested speed value	

(a) Only for MVPD30. Displacements on page 50

(b) Drive shafts availability at pages 25 and mounting flanges availability at pages 27

(c) Intermediate flanges on page 43

(d) Couplings availability: MVPD30 on page 45 and 47

Omit code only if ordering assembled multiple pumps

(#) Only for torque limiter. Refer to page 53 for more information.

ORDER EXAMPLE

Through drive double pump MVPD30 with RN2 (dual setting torque limiter with remote flow control) + MVPD30 with LS0 flow compensator.

INDIVIDUAL SECTIONS

Front section: **MVPD30.34S-04S5-LME/MB-N-RN2-1-S-LS2-G-AS5/04 (70/85/2600)**

Rear section: **MVPD30.34S-04S5-LME/MB-N-LS0-Z-G**

ASSEMBLED DOUBLE PUMP

MVPD30.34S-04S5-LME/MB-N-RN2-1-S-LS2-G (70/85/2600)/MVPD30.34S-04S5-LME/MB-N-LS0-Z-G

02/05.2021

NOTES

02/05.2021

MVPD 02 T A Edition: 02/05.2021 Replaces: MVPD 01 T A

Headquarters:
CASAPPA S.p.A.
Via Balestrieri, 1
43044 Lemignano di Collecchio
Parma (Italy)
Tel. (+39) 0521 30 41 11
Fax (+39) 0521 80 46 00
E-mail: info@casappa.com
www.casappa.com